DVD Home Theater System HTS3264D/37

Service
Service
Service

Service Manual

TABLE OF CONTENTS

	Chapter
Location of PCB Boards	1-2
Versions Variation	1-2
Specifications	1-3
Measurement Setup	1-4
Service Aids	1-5
ESD & Safety Instruction	1-6
Lead-free solding Information	1-7
Setting procedure & Repair Instructions	2
Disassembly Instructions & Service positions	3
Block & Wiring Diagram	4
VFD+JACK+STANDBY Board	5
Main Board	6
Power Board	7
Mechanical Exploded View & Part List	8
Revision List	9

© Copyright 2008 Philips Consumer Electronics B.V. Eindhoven, The Netherlands
All rights reserved. No part of this publication may be reproduced, stored in a retrieval system or transmitted, in any form or by any means, electronic, mechanical, photocopying, or otherwise without the prior permission of Philips.

Published by LM0815 Service Audio Printed in The Netherlands Subject to modification

GB 3139 785 33821

Version 1.1

PHILIPS

LOCATION OF PCB BOARDS

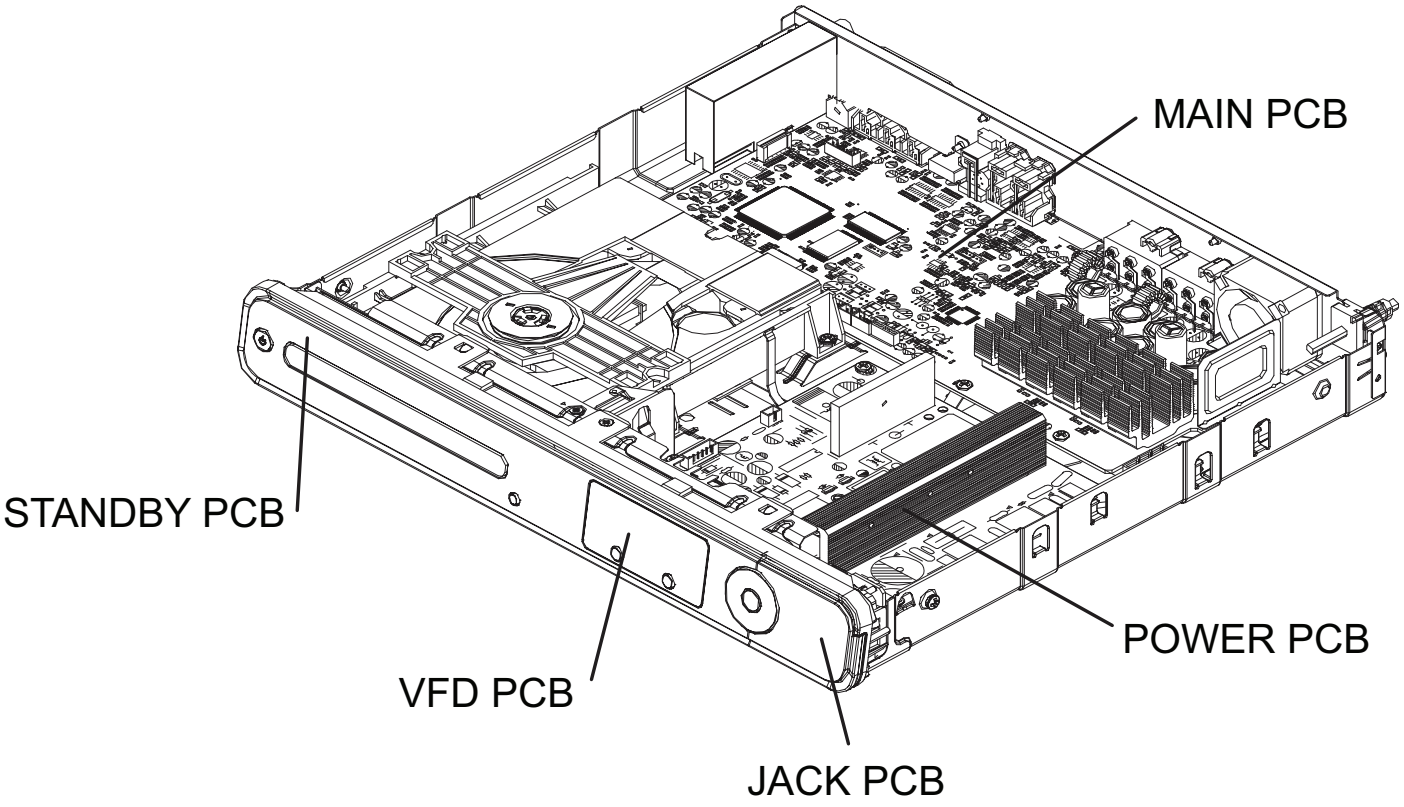

VERSION VARIATION:

Type/Versions / Features	HTS3264D /37
Output Power - 600W	X
Voltage (120V)	X
Aux IN	X

SERVICE SCNARIO MATRIX:

Type/Versions / Board in used	HTS3264D /37
Main Board	Bd
Power Board	Bd
VFD+JACK+STANDBY Board	Bd

*Bd = Board Level Repair

SPECIFICATIONS

AMPLIFIER

Total output power:
- Home Theater mode ..... 600 W
- FTC* output power ..... 420 W

Frequency Response ..... 180 Hz – 18 kHz / ±3 dB
Signal-to-Noise Ratio..... > 60 dB (A-weighted)
Input Sensitivity
- AUX 1 ..... 400 mV
- AUX 2 ..... 400 mV
- MP3 LINK ..... 400 mV

* (Main Ch@1kHz Sub Ch 60 Hz within 1% THD)

RADIO

Tuning Range ..... FM 87.5-108 MHz
.....(100 kHz)
.....26 dB Quieting
Sensitivity ..... FM 22 dBf
IF Rejection Ratio ..... FM 60 dB
Signal-to-Noise Ratio..... FM 50 dB
Harmonic Distortion ..... FM Mono 3%
..... FM Stereo 3%
Frequency Response ..... FM 180 Hz–10 kHz / ±6 dB
Stereo Separation..... FM 26 dB (1 kHz)
Stereo Threshold ..... FM 29 dB

DISC

Laser Type..... Semiconductor
Disc Diametre ..... 12cm / 8cm
Video Decoding ..... MPEG-1 / MPEG-2 /
..... / DivX 3/4/5/6, Ultra
Video DAC ..... 12 Bits
Signal System..... NTSC / Multi
Video Format ..... 4:3 / 16:9
Video S/N ..... 56 dB
Composite Video
Output..... 1.0 Vp-p, 75Ω
Frequency Response ..... 4 Hz–20 kHz (44.1 kHz)
..... 4 Hz–22 kHz (48 kHz)
..... 4 Hz–44 kHz (96 kHz)
PCM..... IEC 60958
Dolby Digital ..... IEC 60958, IEC 61937

MAIN UNIT

Power Supply Rating ..... 120 V; 60 Hz
Power Consumption ..... 100 W
Dimensions..... 360 x 58 x 332 (mm)
.....(w x h x d)
Weight ..... 2.9 kg

IPOD DOCK

Dimensions..... 32.5 x 104 (mm)
..... (h x d)
Weght ..... 163.5 g

FRONT AND REAR SPEAKERS

System..... Full range satellite
Impedance..... 3Ω
Speaker drivers ..... 3” full range speaker
Frequency response..... 150 Hz – 20 kHz
Dimensions..... 103 x 203 x 71 (mm)
.....(w x h x d)
Weight ..... 0.45 kg/each

CENTRE SPEAKER

System..... Full range satellite
Impedance..... 6Ω
Speaker drivers ..... 3” full range speaker
Frequency response..... 150 Hz – 20 kHz
Dimensions..... 244 x 105 x 74 (mm)
.....(w x h x d)
Weight ..... 0.78 kg

SUBWOOFER

Impedance..... 6 Ω
Speaker drivers ..... 165mm (6.5”) woofer
Frequency response..... 40 Hz – 150 Hz
Dimensions..... 123 x 310 x 369 (mm)
.....(w x h x d)
Weight ..... 3.85 kg

Specifications subject to change without prior notice.

MEASUREMENT SETUP

Tuner FM

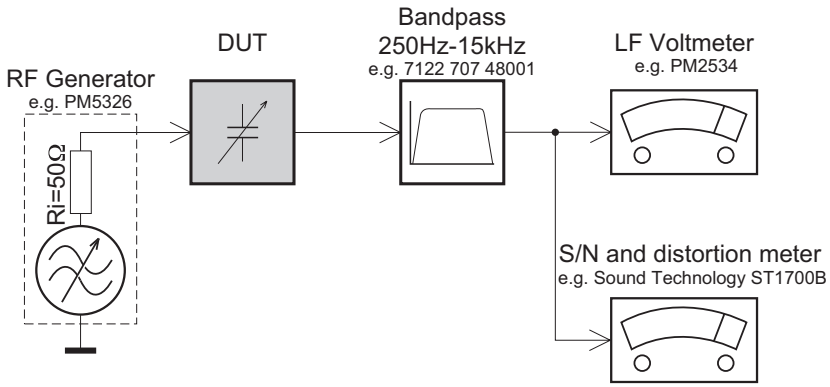

Use a bandpass filter to eliminate hum (50Hz, 100Hz) and disturbance from the pilottone (19kHz, 38kHz).

CD

Use Audio Signal Disc SBC429 4822 397 30184
(replaces test disc 3)

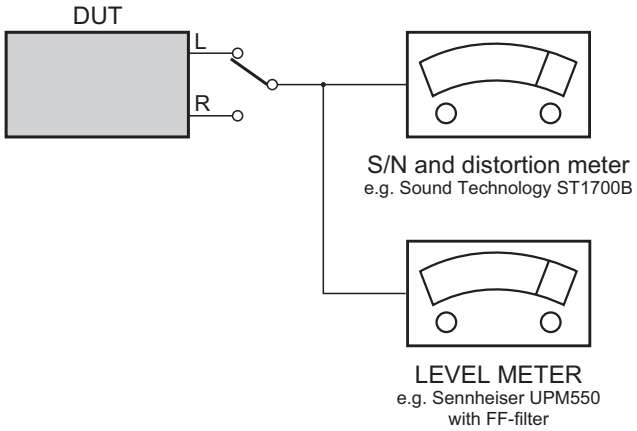

SERVICE AIDS

Service Tools:

Universal Torx driver holder 4822 395 91019
Torx bit T10 150mm 4822 395 50456
Torx driver set T6-T20 .....4822 395 50145
Torx driver T10 extended 4822 395 50423

Compact Disc:

SBC426/426A Test disc 5 + 5A 4822 397 30096
SBC442 Audio Burn-in test disc 1kHz 4822 397 30155
SBC429 Audio Signals disc 4822 397 30184
Dolby Pro-logic Test Disc 4822 395 10216

HANDLING CHIP COMPONENTS

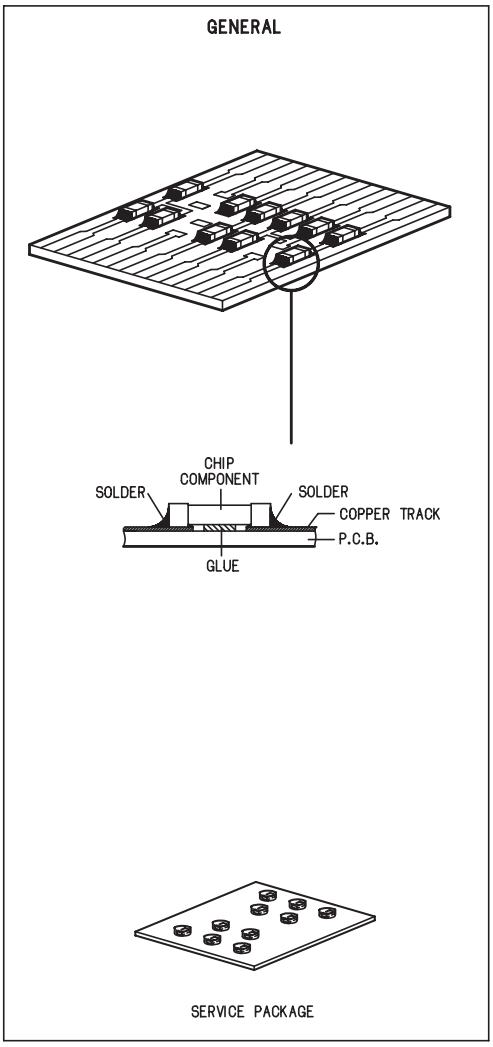

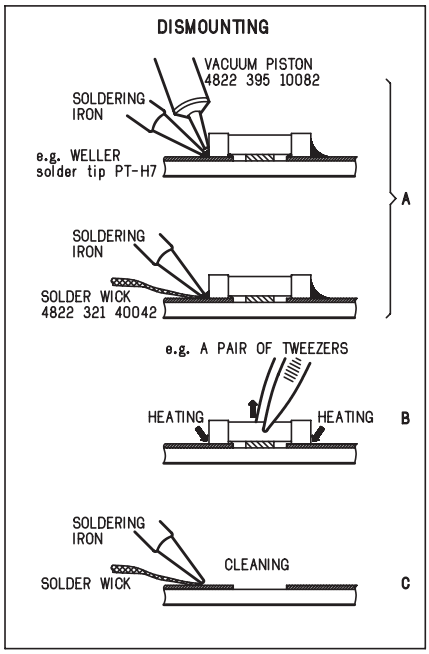

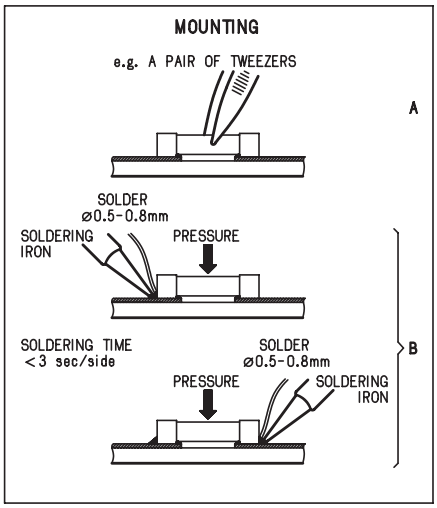

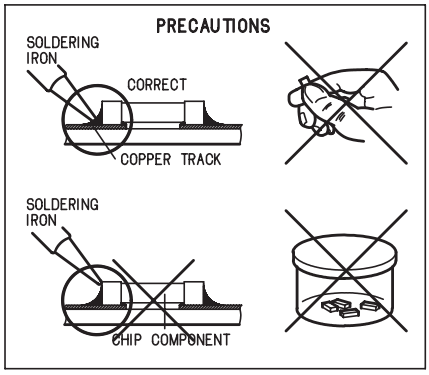

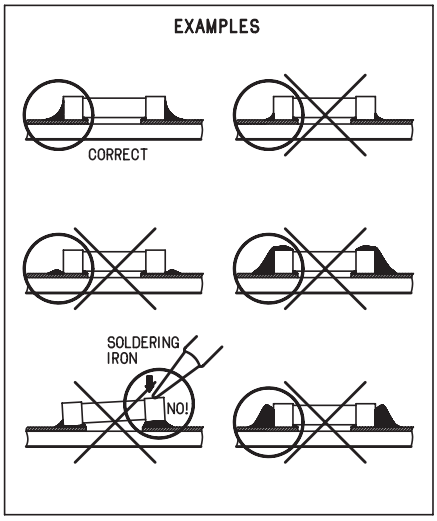

ESD

(GB) WARNING

All ICs and many other semi-conductors are susceptible to electrostatic discharges (ESD). Careless handling during repair can reduce life drastically.
When repairing, make sure that you are connected with the same potential as the mass of the set via a wrist wrap with resistance.
Keep components and tools also at this potential.

(NL) WAARSCHUWING

Alle IC's en vele andere halfgeleiders zijn gevoelig voor electrostatische ontladingen (ESD).
Onzorgvuldig behandelen tijdens reparatie kan de levensduur drastisch doen verminderen.
Zorg ervoor dat u tijdens reparatie via een polsband met weerstand verbonden bent met hetzelfde potentiaal als de massa van het apparaat.
Houd componenten en hulpmiddelen ook op ditzelfde potentiaal.

(F) ATTENTION

Tous les IC et beaucoup d'autres semi-conducteurs sont sensibles aux décharges statiques (ESD).
Leur longévité pourrait être considérablement écourtée par le fait qu'aucune précaution n'est prise à leur manipulation.
Lors de réparations, s'assurer de bien être relié au même potentiel que la masse de l'appareil et enfiler le bracelet serti d'une résistance de sécurité.
Veiller à ce que les composants ainsi que les outils que l'on utilise soient également à ce potentiel.

(D) WARNUNG

Alle ICs und viele andere Halbleiter sind empfindlich gegenüber elektrostatischen Entladungen (ESD).
Unsorgfältige Behandlung im Reparaturfall kan die Lebensdauer drastisch reduzieren.
Veranlassen Sie, dass Sie im Reparaturfall über ein Pulsarmband mit Widerstand verbunden sind mit dem gleichen Potential wie die Masse des Gerätes.
Bauteile und Hilfsmittel auch auf dieses gleiche Potential halten.

(I) AVVERTIMENTO

Tutti IC e parecchi semi-conduttori sono sensibili alle scariche statiche (ESD).
La loro longevità potrebbe essere fortemente ridatta in caso di non osservazione della più grande cauzione alla loro manipolazione.
Durante le riparazioni occorre quindi essere collegato allo stesso potenziale che quello della massa dell'apparecchio tramite un braccialetto a resistenza.
Assicurarsi che i componenti e anche gli utensili con quali si lavora siano anche a questo potenziale.

(GB) ESD PROTECTION EQUIPMENT

Complete Kit ESD3 (small tablemat, wristband, connection box, estention cable and earth cable 4822 310 10671
Wristband tester 4822 344 13999

(GB)

Safety regulations require that the set be restored to its original condition and that parts which are identical with those specified, be used.

Safety components are marked by the symbol ⚠ .

(NL)

Veiligheidsbepalingen vereisen, dat het apparaat bij reparatie in zijn oorspronkelijke toestand wordt teruggebracht en dat onderdelen, identiek aan de gespecificeerde, worden toegepast.

De Veiligheidsonderdelen zijn aangeduid met het symbol ⚠ .

(F)

Les normes de sécurité exigent que l'appareil soit remis à l'état d'origine et que soient utiliséés les piéces de rechange identiques à celles spécifiées.

Less composants de sécurité sont marqués ⚠ .

(D)

Bei jeder Reparatur sind die geltenden Sicherheitsvorschriften zu beachten. Der Original zustand des Geräts darf nicht verändert werden; für Reparaturen sind Original-Ersatzteile zu verwenden.

Sicherheitsbauteile sind durch das Symbol ⚠ markiert.

(I)

Le norme di sicurezza esigono che l'apparecchio venga rimesso nelle condizioni originali e che siano utilizzati i pezzi di ricambio identici a quelli specificati.

Componenty di sicurezza sono marcati con ⚠ .

(GB)

After servicing and before returning set to customer perform a leakage current measurement test from all exposed metal parts to earth ground to assure no shock hazard exist, The leakage current must not exceed 0.5mA.

(GB) Warning !

Invisible laser radiation when open.
Avoid direct exposure to beam.

(S) Varning !

Osynlig laserstrålning när apparaten är öppnad och spärren är urkopplad. Betrakta ej strålen.

(SF) Varoitus !

Avatussa laitteessa ja suojalukituksen ohitettaessa olet alttiina näkymättömälle laserisäteilylle. Älä katso säteeseen!

(DK) Advarse !

Usynlig laserstråling ved åbning når sikkerhedsafbrydere er ude af funktion. Undgå udsaettelse for stråling.

(F)

"Pour votre sécurité, ces documents doivent être utilisés par des spécialistes agréés, seuls habilités à réparer votre appareil en panne".

Pb(Lead) Free Solder

When soldering , be sure to use the pb free solder.

INDENTIFICATION:
Regardless of special logo (not always indicated)

one must treat all sets from **1 Jan 2005** onwards, according next rules:

Important note: In fact also products of year 2004 must be treated in this way as long as you avoid mixing solder-alloys (leaded/ lead-free). So best to always use SAC305 and the higher temperatures belong to this.

Due to lead-free technology some rules have to be respected by the workshop during a repair:

- Use only lead-free solder alloy Philips SAC305 with order code 0622 149 00106. If lead-free solder-paste is required, please contact the manufacturer of your solder-equipment. In general use of solder-paste within workshops should be avoided because paste is not easy to store and to handle.
- Use only adequate solder tools applicable for lead-free solder alloy. The solder tool must be able
  - To reach at least a solder-temperature of 400?C,
  - To stabilize the adjusted temperature at the solder-tip
  - To exchange solder-tips for different applications.
- Adjust your solder tool so that a temperature around 360?C – 380?C is reached and stabilized at the solder joint. Heating-time of the solder-joint should not exceed ~ 4 sec. Avoid temperatures above 400?C otherwise wear-out of tips will rise drastically and flux-fluid will be destroyed. To avoid wear-out of tips switch off un-used equipment, or reduce heat.
- Mix of lead-free solder alloy / parts with leaded solder alloy / parts is possible but PHILIPS recommends strongly to avoid mixed solder alloy types (leaded and lead-free).
  If one cannot avoid or does not know whether product is lead-free, clean carefully the solder-joint from old solder alloy and re-solder with new solder alloy (SAC305).
- Use only original spare-parts listed in the Service-Manuals. Not listed standard-material (commodities) has to be purchased at external companies.
- Special information for BGA-ICs:
- Always use the 12nc-recognizable soldering temperature profile of the specific BGA (for de-soldering always use the lead-free temperature profile, in case of doubt)
- Lead free BGA-ICs will be delivered in so-called 'dry-packaging' (sealed pack including a silica gel pack) to protect the IC against moisture. After opening, dependent of MSL-level seen on indicator-label in the bag, the BGA-IC possibly still has to be baked dry. (MSL=Moisture Sensitivity Level). This will be communicated via AYS-website.
  Do not re-use BGAs at all.
- For sets produced before 1.1.2005 (except products of 2004), containing leaded solder-alloy and components, all needed spare-parts will be available till the end of the service-period. For repair of such sets nothing changes.
- On our website **www.atyourservice.ce.Philips.com** you find more information to:

  - BGA-de-/soldering (+ baking instructions)
  - Heating-profiles of BGAs and other ICs used in Philips-sets

  You will find this and more technical information within the "magazine", chapter "workshop news".

  For additional questions please contact your local repair-helpdesk.

2 - 1

System , Region Code , etc. Setting Produre

1)System Reset

a) Press “OPTIONS“ button on R/C,TV will show setup menu
b) Select the menu using the▼ and ► on R/C
c) Go preference page to do system reset

2)Region Code Change

a) In open model, press”9” “9“ “9“ “9“ on R/C,then input desired number to change region code :

1	USA
2	EU
3	AP
4	Australia ,NZ , Latam
5	Russia , INDIA
6	CHINA

3)Version Control Change

a) In open model, press “1“ “5“ “9“ on R/C
b) Press “ok” button to confirm
c) TV will show message as below:

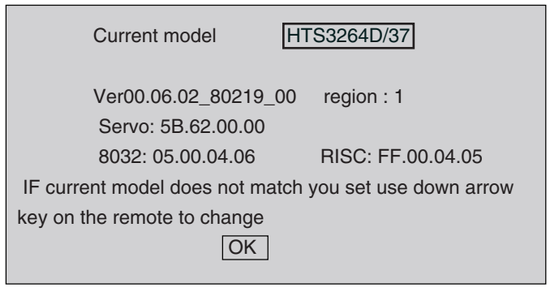

4)Password Change

a) Press “OPTIONS “ button on R/C,TV will show setup menu
b) Select the menu using the▼ and ► on R/C
c) Go preference page select “password“ to change
* 000000 is default password supplied.

5)Check on the Sofeware Version

a) Open the CD Door
b) Press “INFO“ button on R/C
c) TV will show the version on screen

6)Trade model

a) Press “Open/Close “ button on R/C
b) Press “2” “5” “9” on R/C,VFD will display “TRA ON “ or “TRA OFF“

7) Upgrading new sofeware

a) Copy “sofeware files” into a CD-R
b) Open the CD Door,then insert the CD-R program disc
c) Close the CD Door
d) VFD will show:
“Loading“
“Erase” -- erase the flash memory
“Writing” about 1 minute
“done “
* the system will switch off and on again automatically.
e) OSD will show:

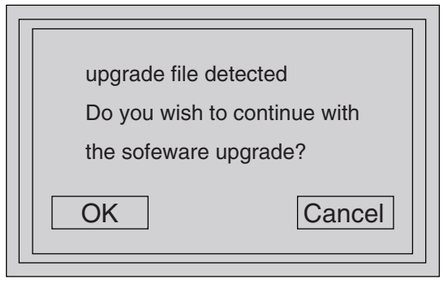

f) Select “OK”, OSD will show:

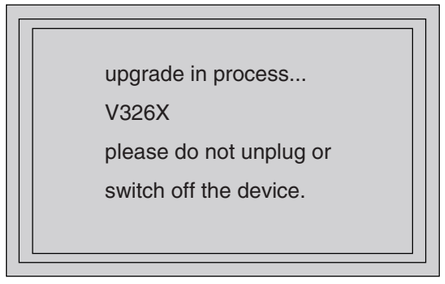

CAUTION!

This information is confidential and may not be distributed.Only a qualified service person should reprogram the Region Code.

2 - 2

REPAIR INSTRUCTIONS (part one)

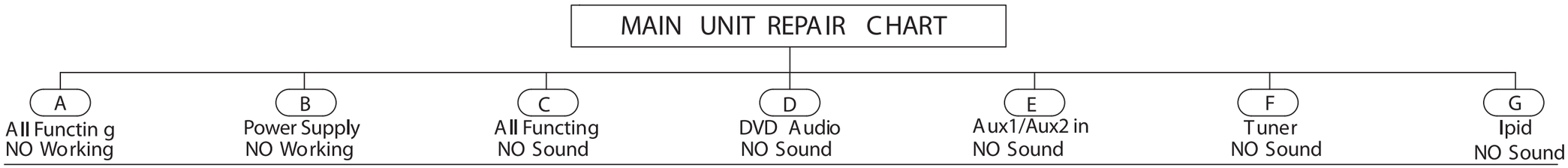

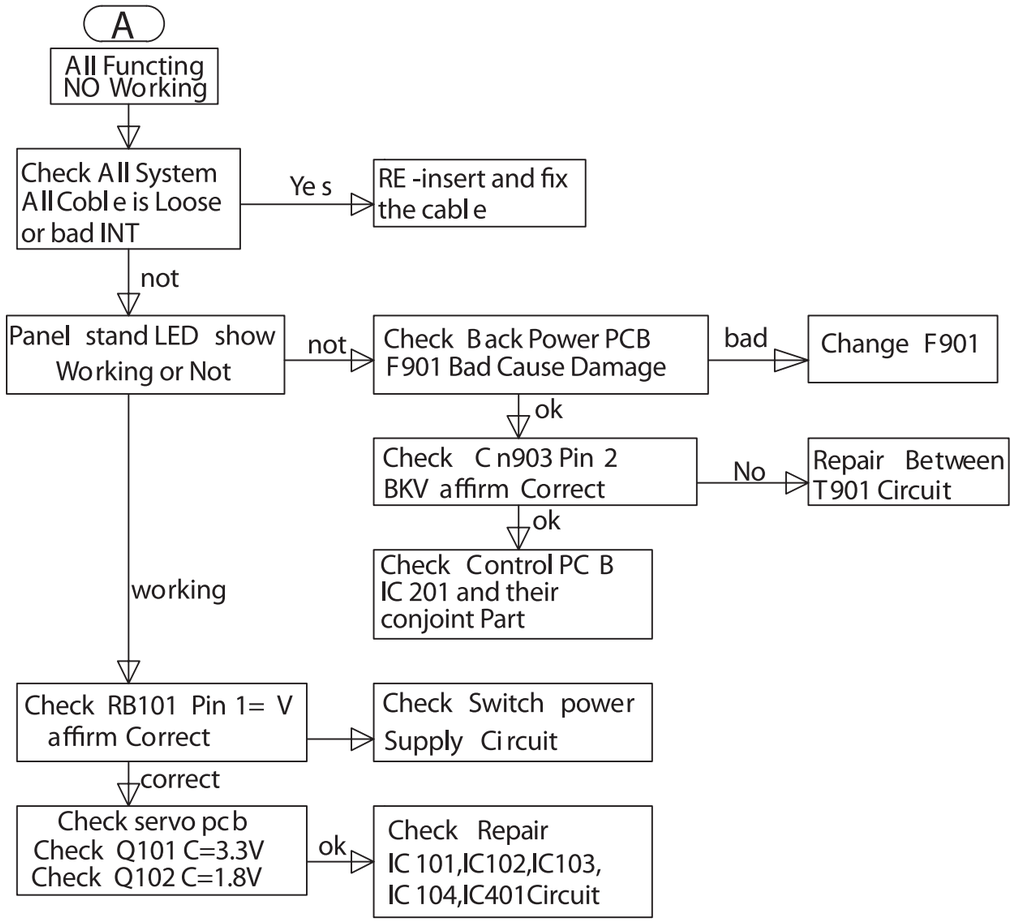

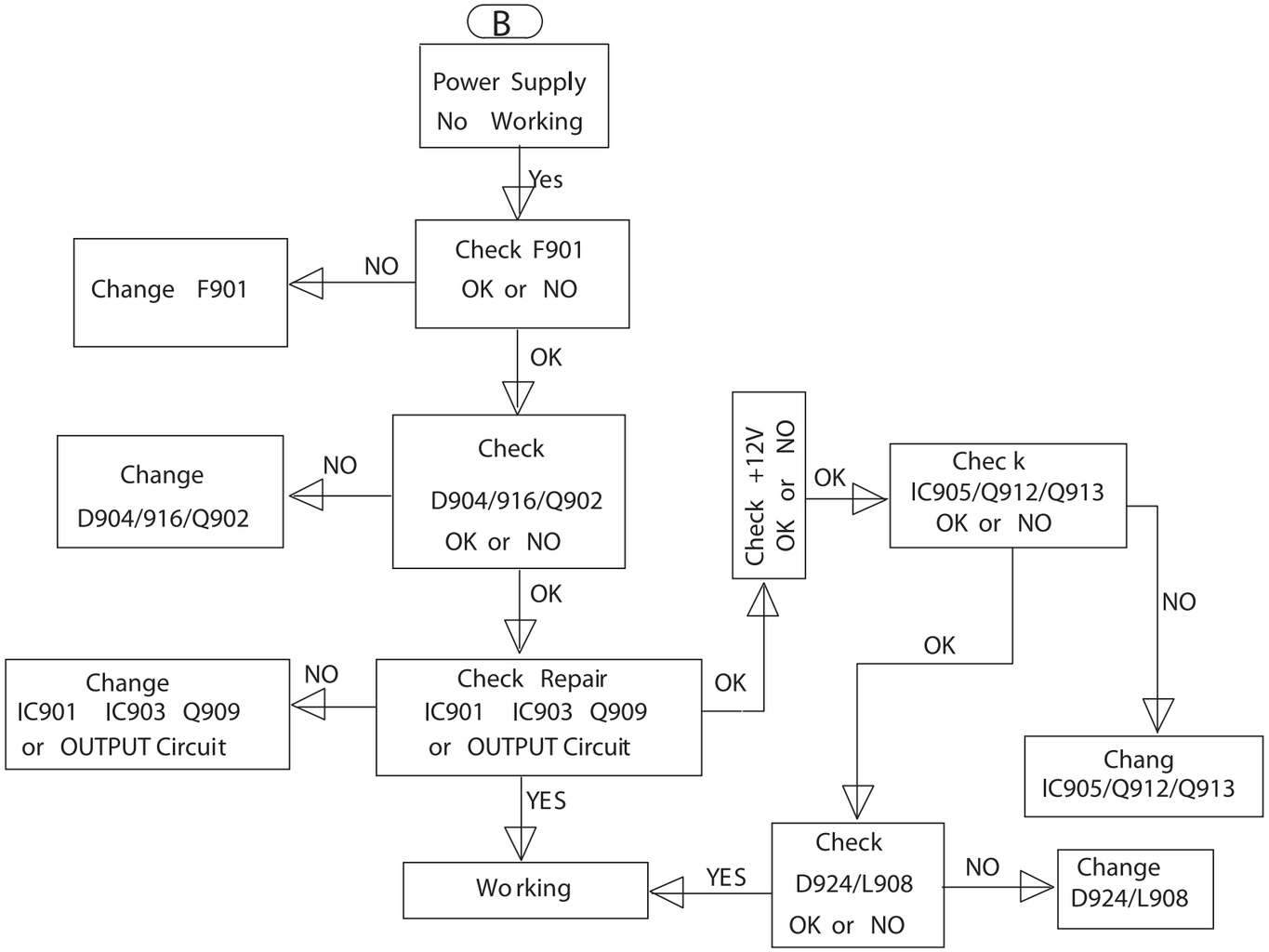

REPAIR INSTRUCTIONS (part two)

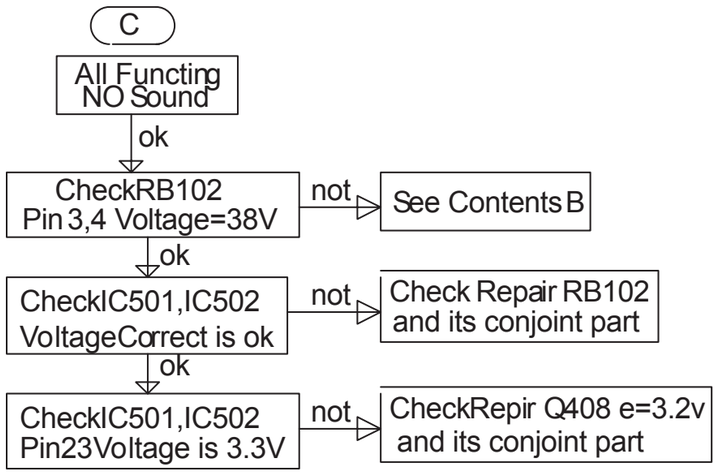

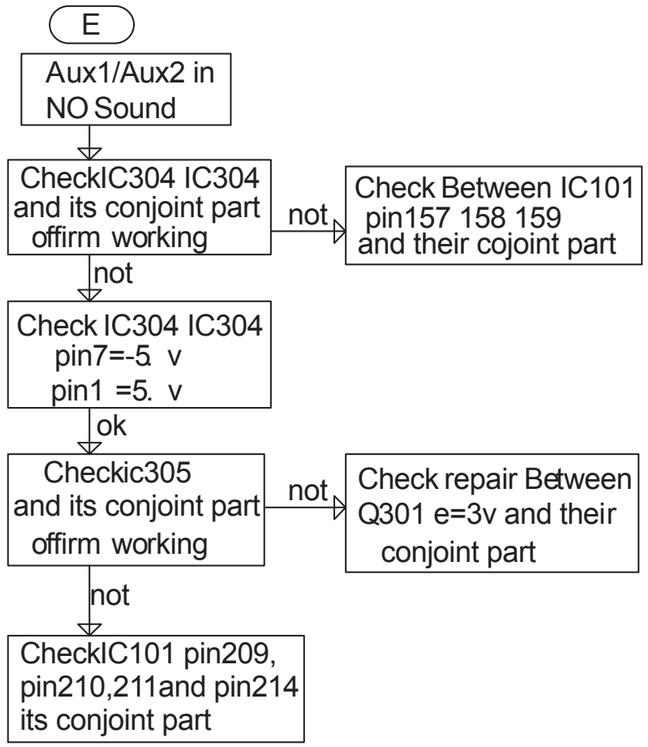

2 - 3

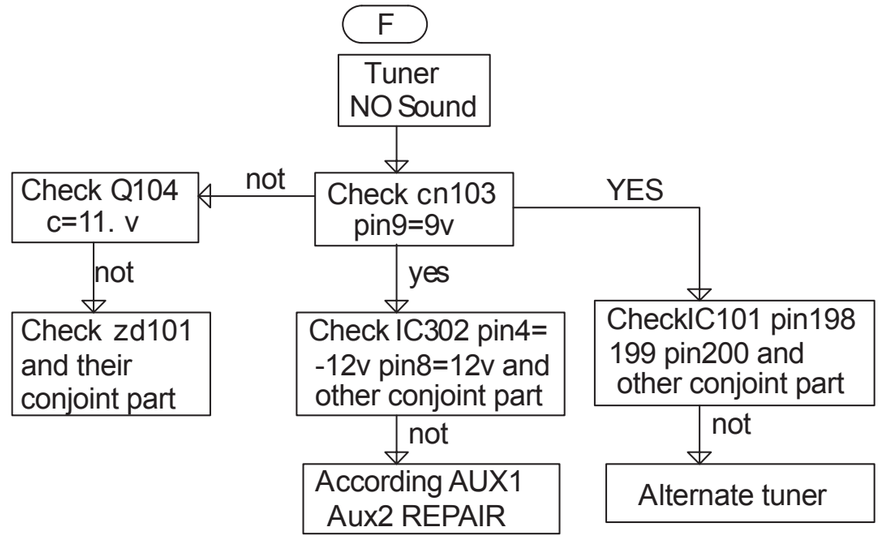

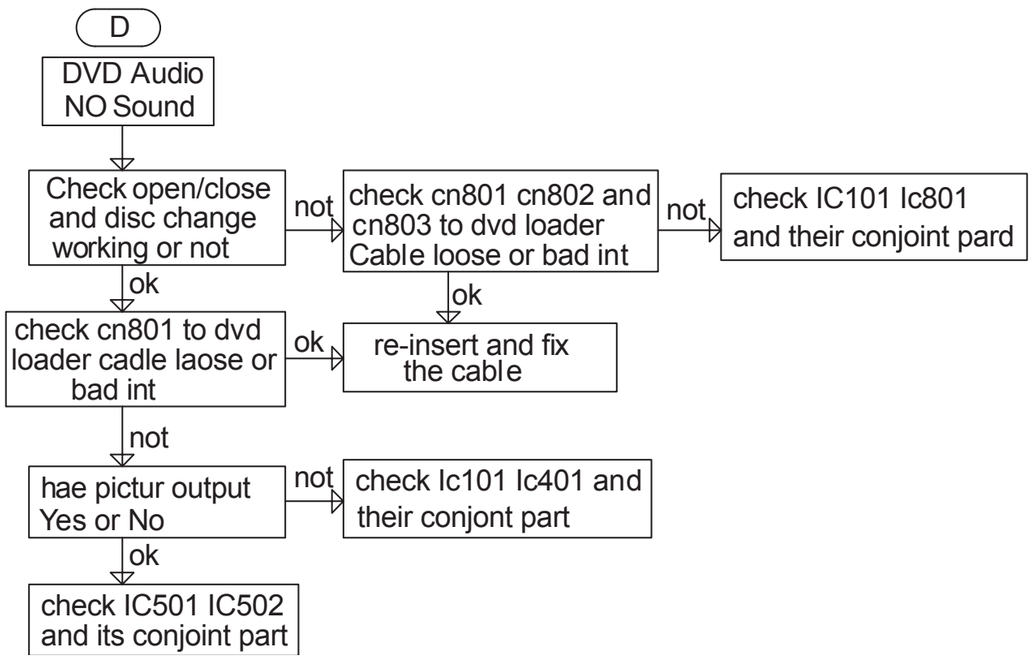

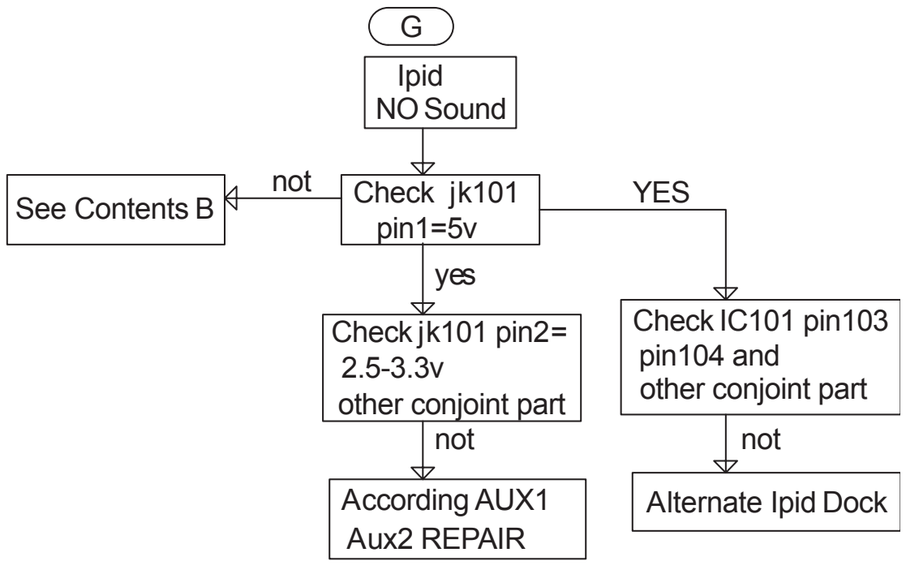

DISASSEMBLY INSTRUCTIONS

Dismantling of the Front Panel Assemble

1) Open the DVD Tray by using the Open/Close Button while the Set is ON and disconnect the mains supply after removing the Tray Cover.
   Note: If this is not possible, the DVD Tray has to be open manually.
   Take a mini screw driver about 2mm diameter and make a marking 24mm from the tip as shown in figure 2 . Place the set on its side, insert the mini screw driver till the marking and slide it towards the left as shown in figure 1 until the Tray moves out of the Front Panel.
2) Return the set to its upright position and remove the Tray Cover as shown in Figure 3 and close the tray manually by pushing it back in.

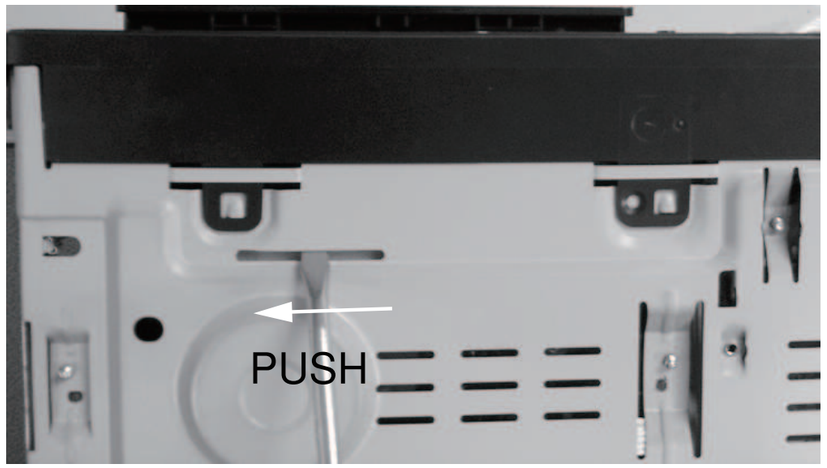

Figure 1

Figure 2

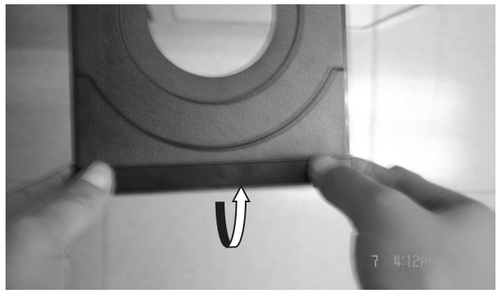

Figure 3

3 - 1

3) Loosen 6 screws and remove the Top Cover by lifting the rear portion upwards before sliding it out towards the rear.
   - 1 screw “A” each on the left & right side as shown in figure 4.
   - 4 screws “B” at the back panel as shown in figure 5.
4) Loosen 6 screws “C“ at the bottom panel as in figure 6 to remove the front panel.

Figure 4

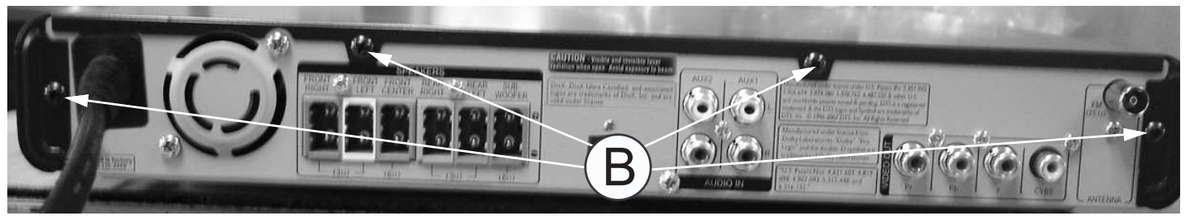

Figure 5

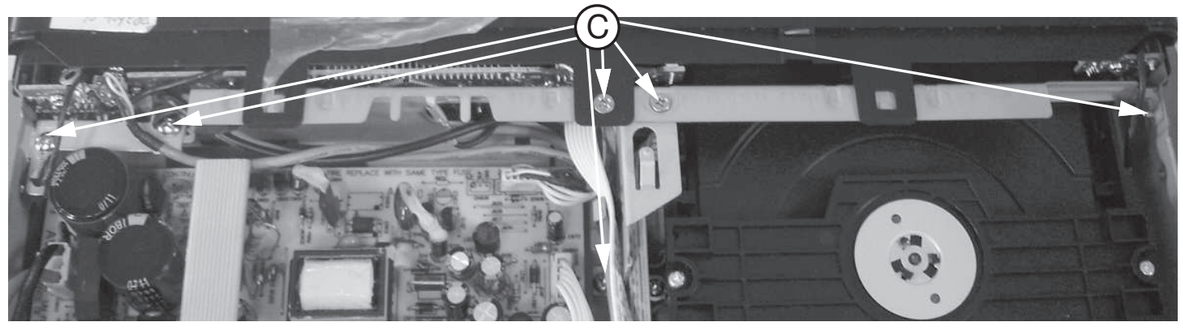

Figure 6

Dismantling of the Power Board

1) Loosen 4 screws " D " on the top of power board as shown in figure 7.
2) With a pincers to nip this space as shown in figurer 8 and to take up the power board.

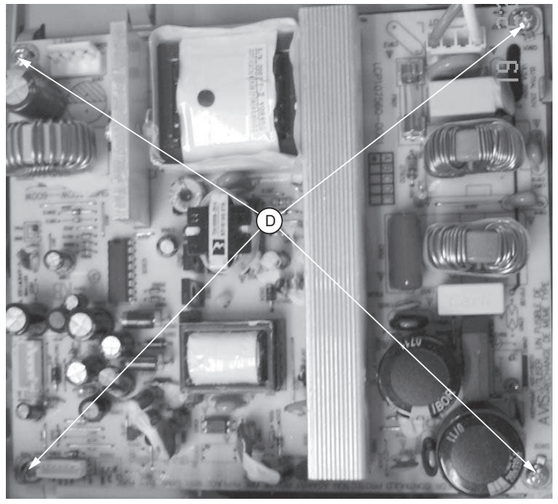

Figure 7

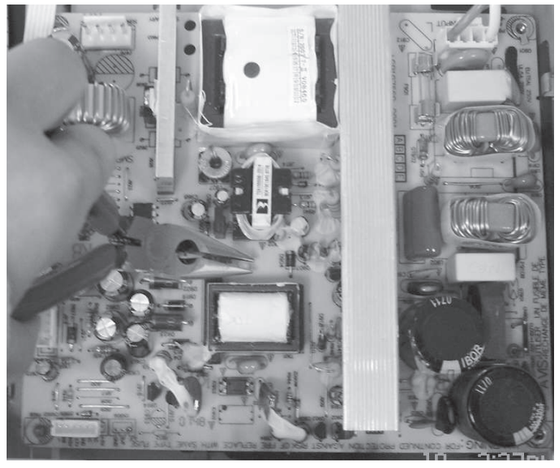

Figure 8

Dismantling of the Main Board

1) Loosen 4 screws "E" on the top of main board as shown in figure 9.
2) Loosen 6 screws "F" at the back panel as shown in figure 10.

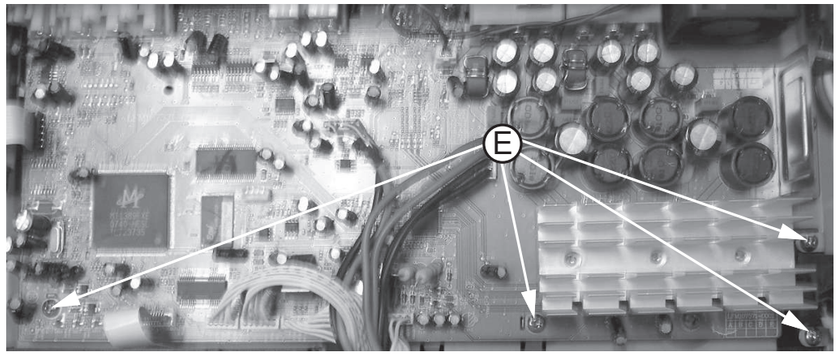

Figure 9

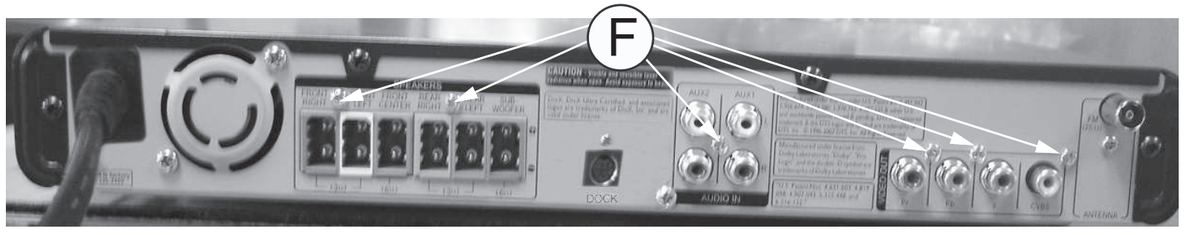

Figure 10

Dismantling of the DVD Module

1) Loosen 4 screws "G" at the DVD module as shown in figure 11.

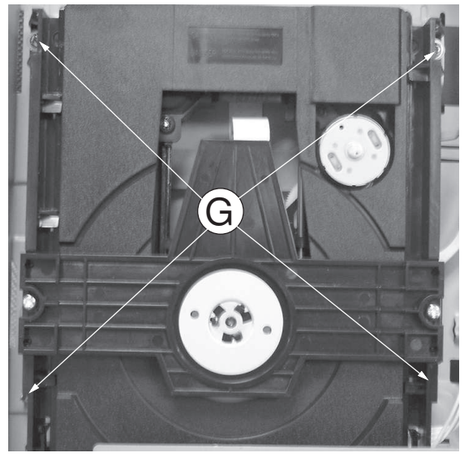

Figure 11

Dismantling of the VFD+JACK+STANDBY Board

1) Loosen 10 screws "H" on the top of VFD+JACK+STANDBY board as shown in figure 12.

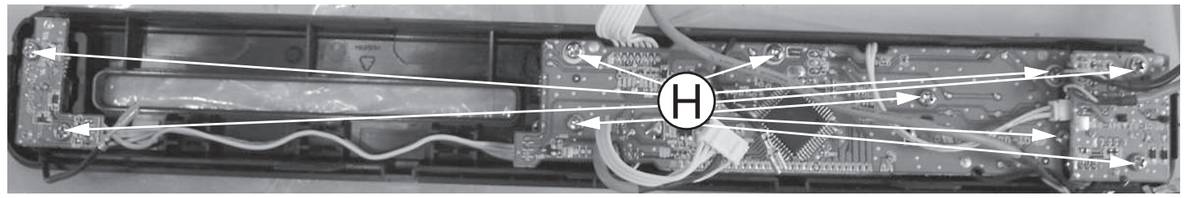

Figure 12

Dismantling of the Ipod Board

1) Loosen 1 screw "I" at the back panel as shown in figure 13.

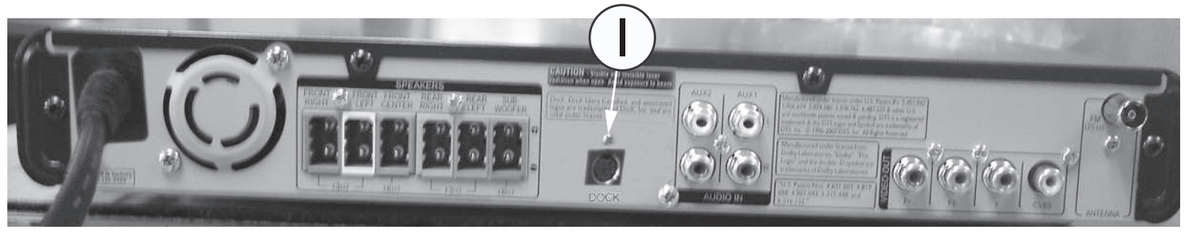

Figure 13

3 - 3

SERVICE POSITIONS

Service position A

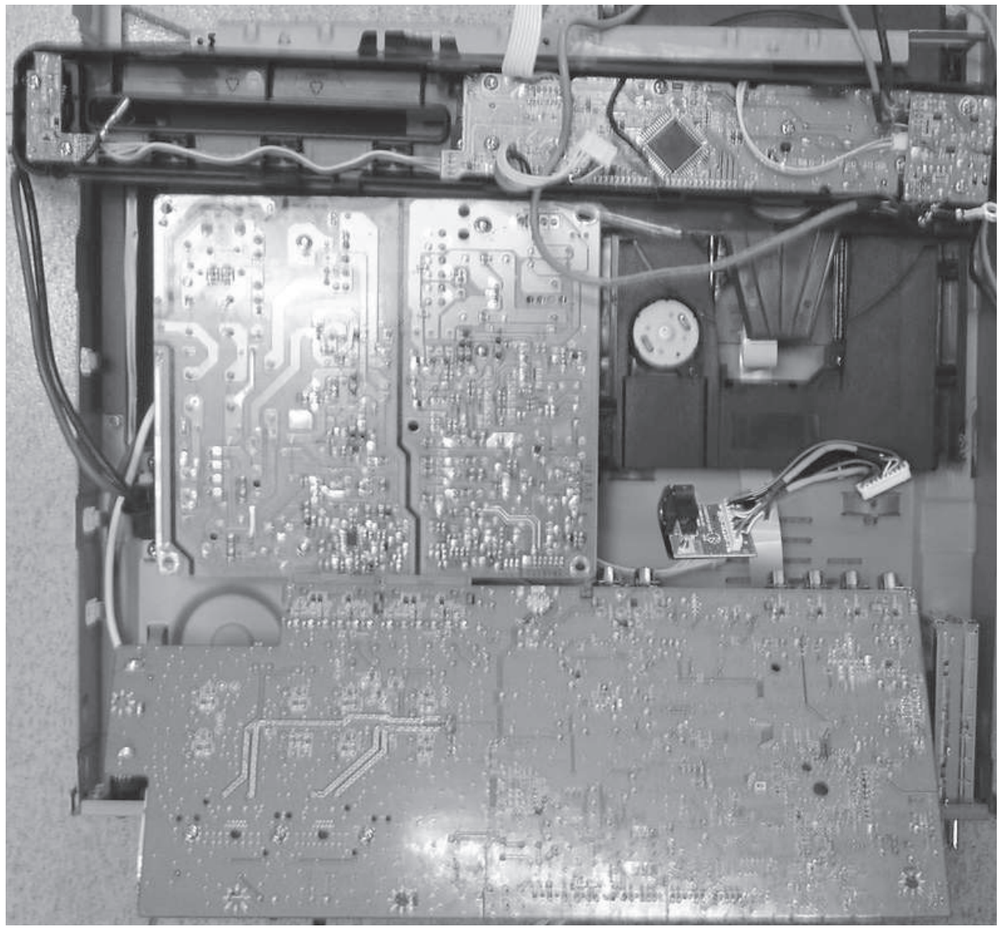

Note:In some service positions the components or copper patterns of one board may risk touching its neighbouring pc boards or metallic parts. To prevent such short-circuit use a piece of hard paper or other insulating material between them.

4 - 1

BLOCK DIAGRAM

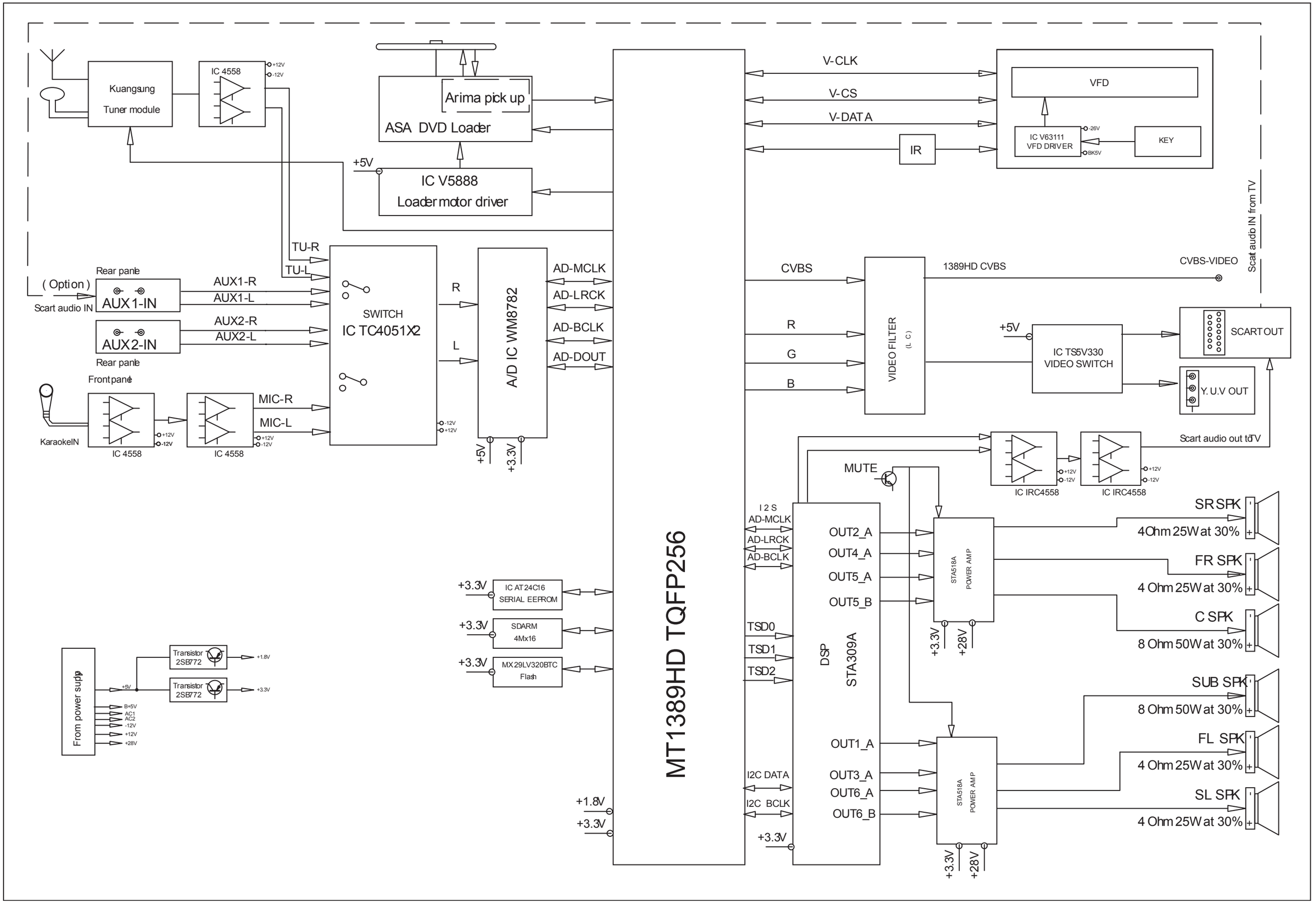

4 - 2

WIRING DIAGRAM

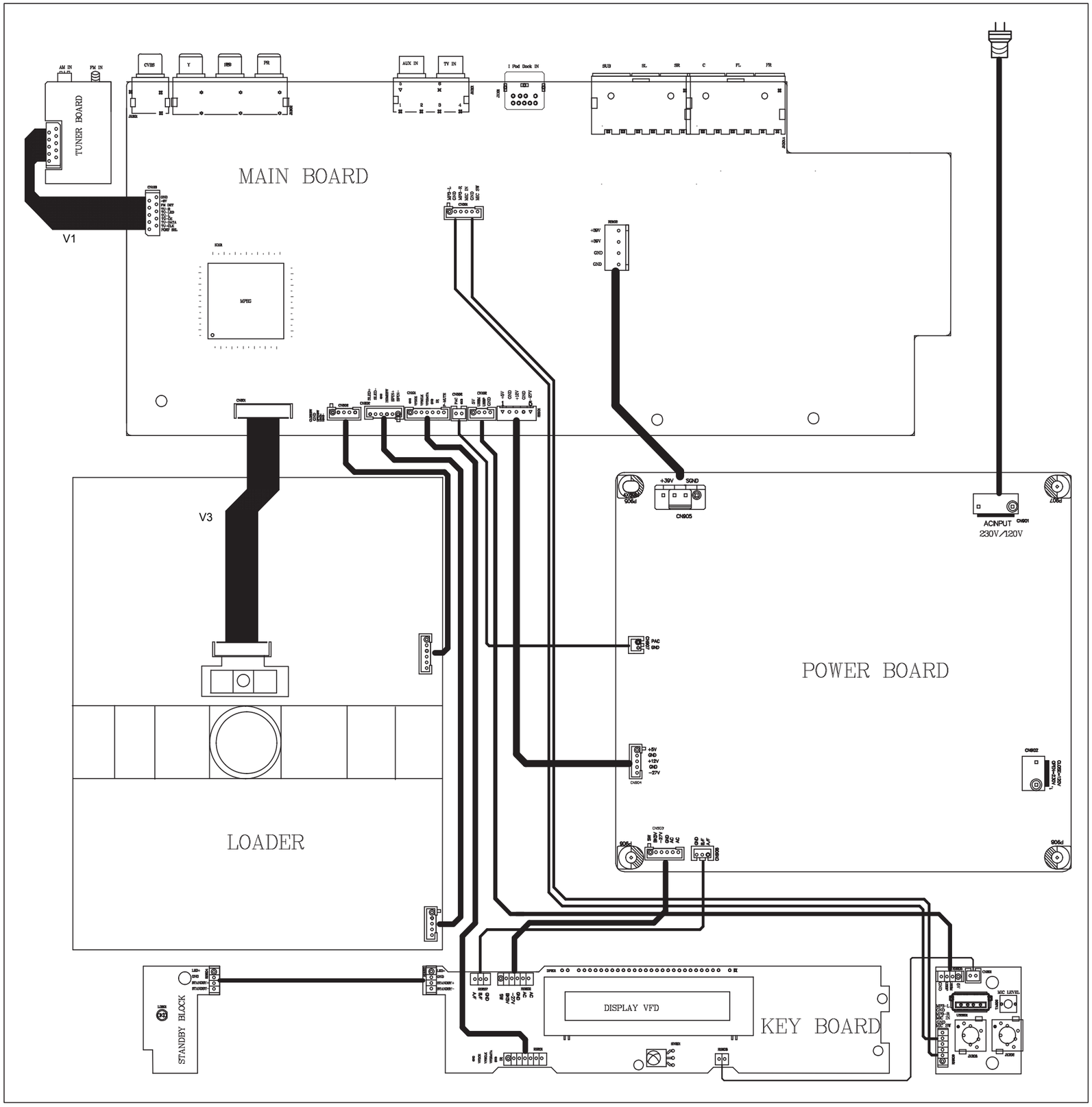

CONTROL BOARD

TABLE OF CONTENTS

FTD Display Pin Assignment.....5-1
Circuit Diagram 5-2
PCB Layout Top & Bottom View.....5-3

FTD DISPLAY PIN ASSIGNMENT

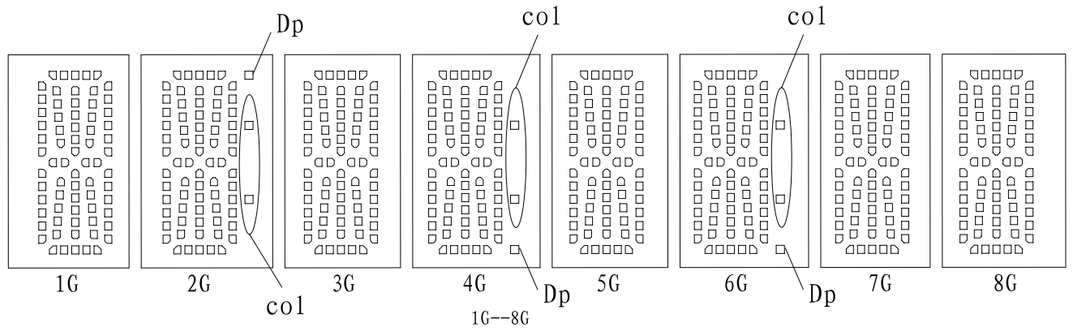

	1G	2G	3G	4G	5G	6G	7G	8G
P1	a	a	a	a	a	a	a	a
P2	j, p	j, p	j, p	j, p	j, p	j, p	j, p	j, p
P3	h	h	h	h	h	h	h	h
P4	k	k	k	k	k	k	k	k
P5	b	b	b	b	b	b	b	b
P6	f	f	f	f	f	f	f	f
P7	m	m	m	m	m	m	m	m
P8	g	g	g	g	g	g	g	g
P9	c	c	c	c	c	c	c	c
P10	e	e	e	e	e	e	e	e
P11	r	r	r	r	r	r	r	r
P12	n	n	n	n	n	n	n	n
P13	d	d	d	d	d	d	d	d
P14		col		col		col		
P15		Dp		Dp		Dp		

PIN CONNECTION

管脚序号(Pin NO.)	1	2	3	4	5	6	7	8	9	10	11	12	13	14	15	16
连接(Connection)	F1	F1	NP	NC	P15	P14	NC	P13	P12	P11	P10	P9	P8	P7	P6	P5
管脚序号(Pin NO.)	17	18	19	20	21	22	23	24	25	26	27	28	29	30	31	32
连接(Connection)	P4	P3	P2	P1	NC	1G	2G	3G	4G	5G	6G	7G	8G	NP	F2	F2

注(Notes) : Fn :灯丝(Filament Pin) nG :栅极(Grid Pin)
Pn :阳极(Anode Pin) NP :无引出脚(No Pin)
NC :无功能(No connection Pin)

5 - 2

CIRCUIT DIAGRAM

C201 C2 C205 C1 C209 C1 C213 A1 C229 D4 C233 D1 C237 D1 D202 D1 DP201 A3 FB204 C4 JK203 C4 R203 C1 R207 D2 R211 C1 R215 C1 R219 B2 R225 A2 R232 B4 RB203 A1 TA201 D4 TA206 D1 TA210 D1 ZD202 C1 ZD206 D4
C202 C2 C206 C1 C210 C1 C214 A2 C230 C1 C234 D1 C238 B4 D204 D2 FB201 C4 FB205 C4 LD201 D4 R204 C1 R208 D2 R212 C1 R216 C1 R222 B1 R226 A2 R233 C4 RB205 C4 TA203 D1 TA207 D1 USB201 C4 ZD203 C1 ZD207 D4
C203 C2 C207 C1 C211 C1 C215 A2 C231 C1 C235 D1 C239 B4 D205 D2 FB202 C4 FB206 B4 Q201 C1 R205 C1 R209 D1 R213 C1 R217 B2 R223 B2 R227 D4 RB201 B1 RB206A B4 TA204 D1 TA208 D1 XL201 C2 ZD204 A2
C204 C1 C208 C1 C212 C1 C228 D4 C232 C2 C236 D1 D201 D1 D206 D2 FB203 C4 IC201 C2 R202 C1 R206 D2 R210 C1 R214 B1 R218 B2 R224 A2 R231 D4 RB202 A1 SN201 C1 TA205 D1 TA209 D1 ZD201 C1 ZD205 A2

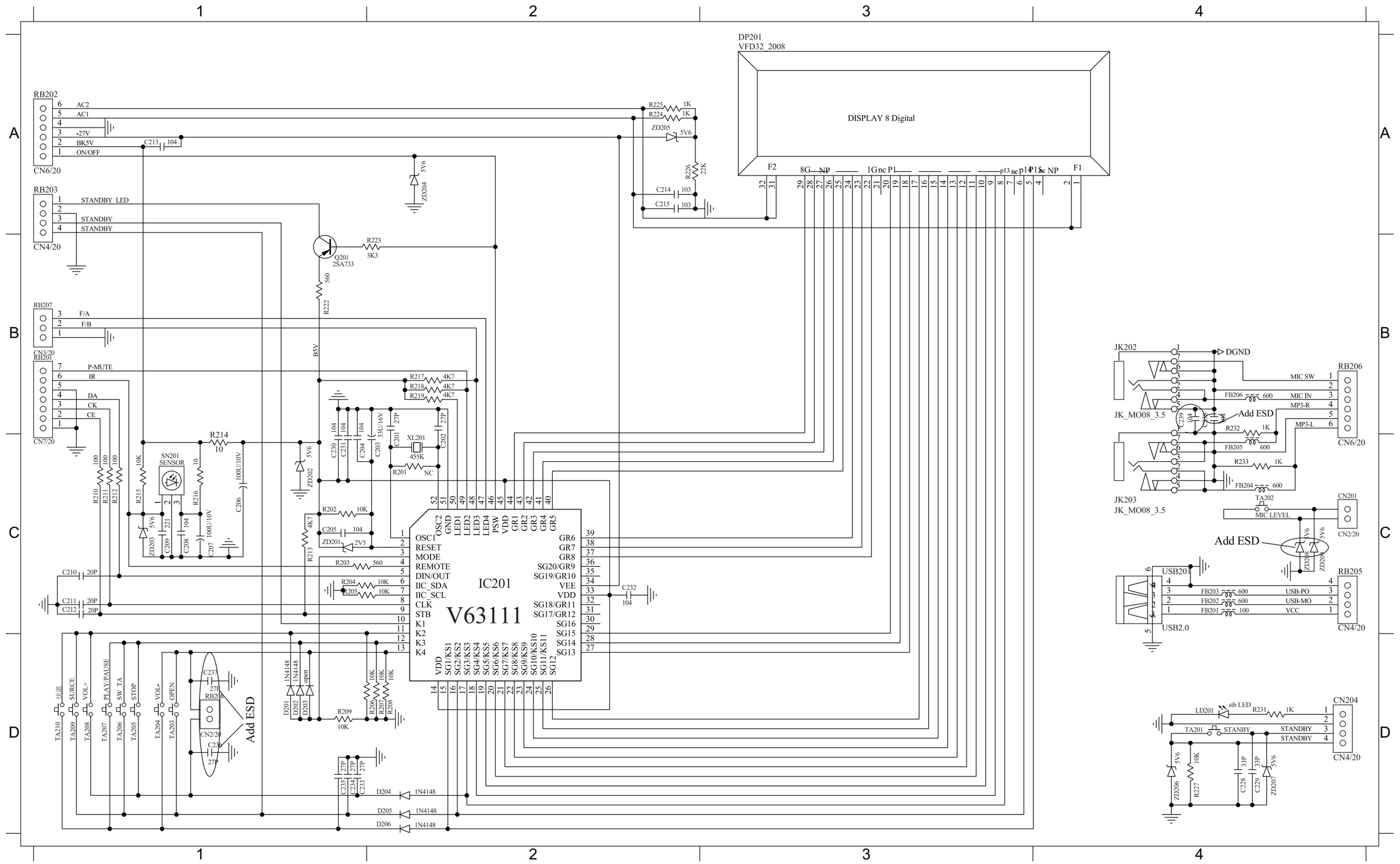

5 - 3

PCB LAYOUT - TOP VIEW

C203 A2 C207 A2 ESD1 A2 ESD6 A1 JK203 A5 RB201 A2 RB203 A1 RB206AA5 TA201 A1 TA204 A3 TA206 A4 TA208 A3 TA210 A5 XL201 A3
C206 A2 DP201 A2 ESD2 A4 ESD7 A5 LD201 A1 RB202 A2 RB205 A5 SN201 A3 TA203 A1 TA205 A4 TA207 A4 TA209 A4 USB201A5

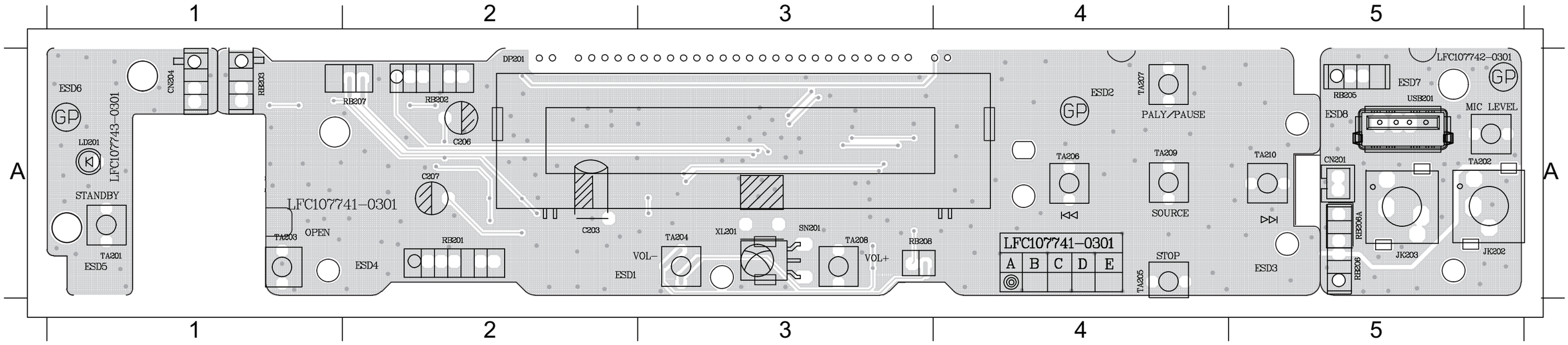

PCB LAYOUT - BOTTOM VIEW

C201 A3 C208 A3 C212 A4 C228 A5 C232 A3 C236 A3 D201 A4 D206 A3 FB204 A1 Q201 A5 R205 A3 R209 A3 R213 A4 R217 A3 R223 A5 R227 A5 ZD201 A4 ZD205 A4
C202 A3 C209 A3 C213 A4 C229 A5 C233 A3 C237 A3 D202 A4 FB201 A1 FB205 A1 R202 A4 R206 A4 R210 A4 R214 A4 R218 A3 R224 A4 R231 A5 ZD202 A4 ZD206 A5
C204 A3 C210 A4 C214 A4 C230 A3 C234 A4 C238 A1 D204 A3 FB202 A1 FB206 A1 R203 A4 R207 A3 R211 A4 R215 A4 R219 A3 R225 A4 R232 A1 ZD203 A4 ZD207 A5
C205 A4 C211 A4 C215 A2 C231 A3 C235 A3 C239 A1 D205 A4 FB203 A1 IC201 A3 R204 A3 R208 A4 R212 A4 R216 A4 R222 A5 R226 A4 R233 A1 ZD204 A4

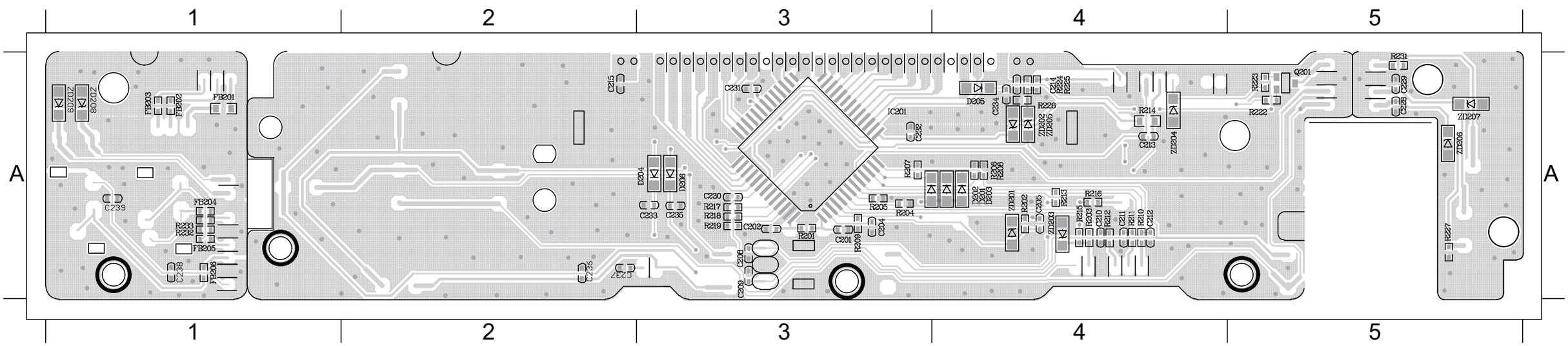

MAIN BOARD

TABLE OF CONTENTS

Internal IC Diagram 6-1
Circuit Diagram (part one) 6-2
Circuit Diagram (part two) 6-3
PCB Layout Top View 6-4
PCB Layout Bottom View 6-5

INTERNAL IC DIAGRAM - STA309A

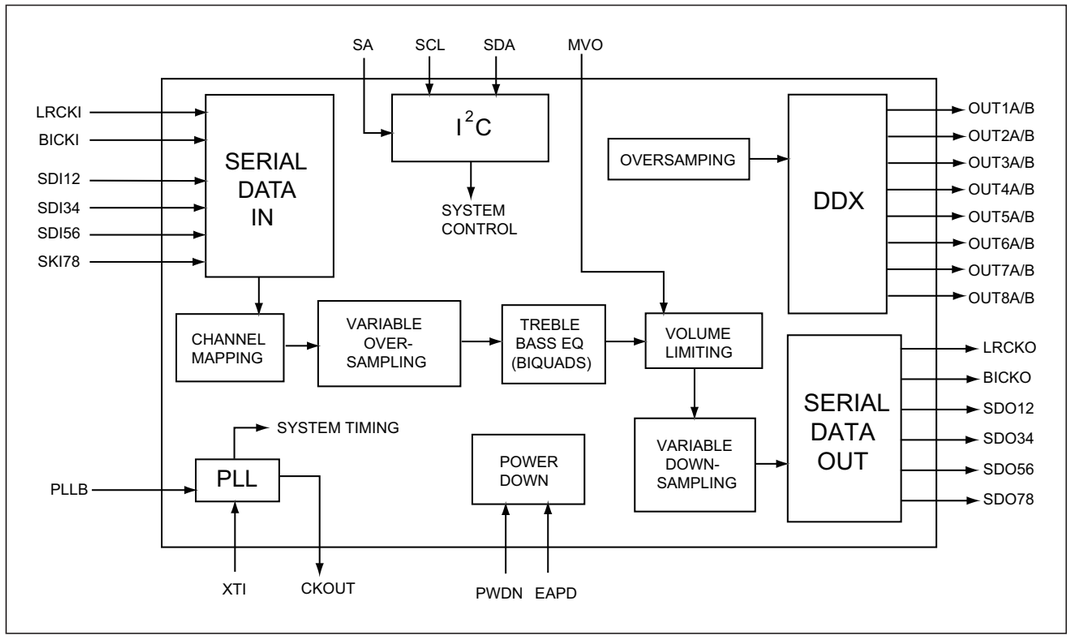

INTERNAL IC DIAGRAM - MT1389HD

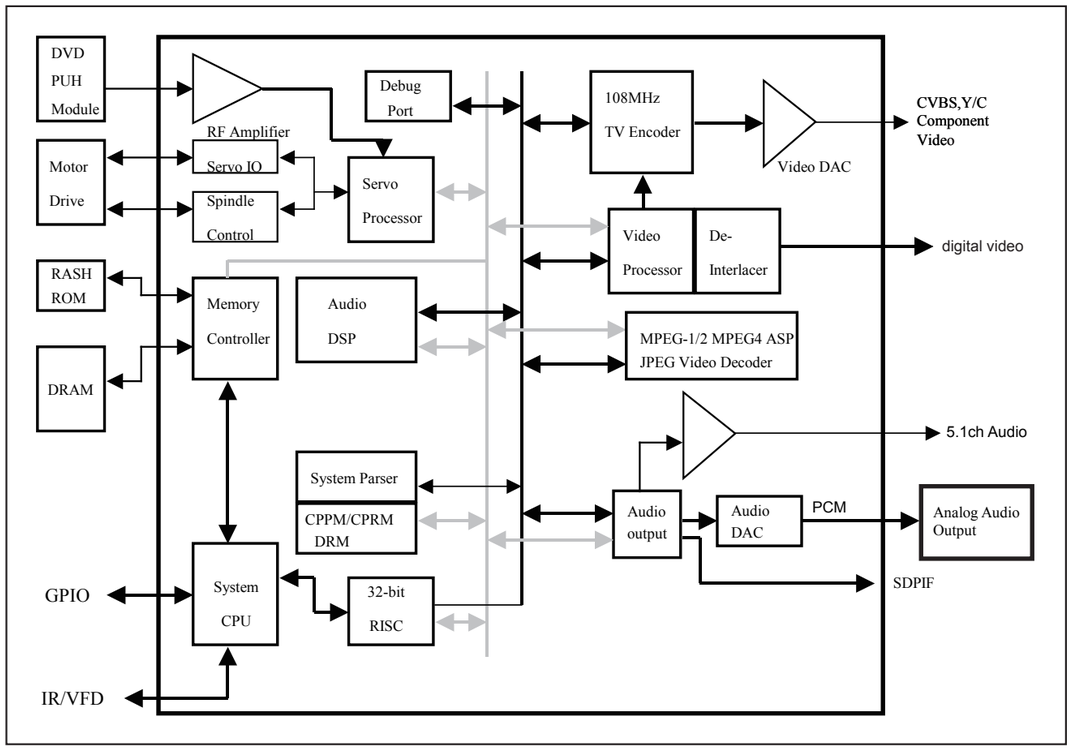

6 - 2

CIRCUIT DIAGRAM - part one

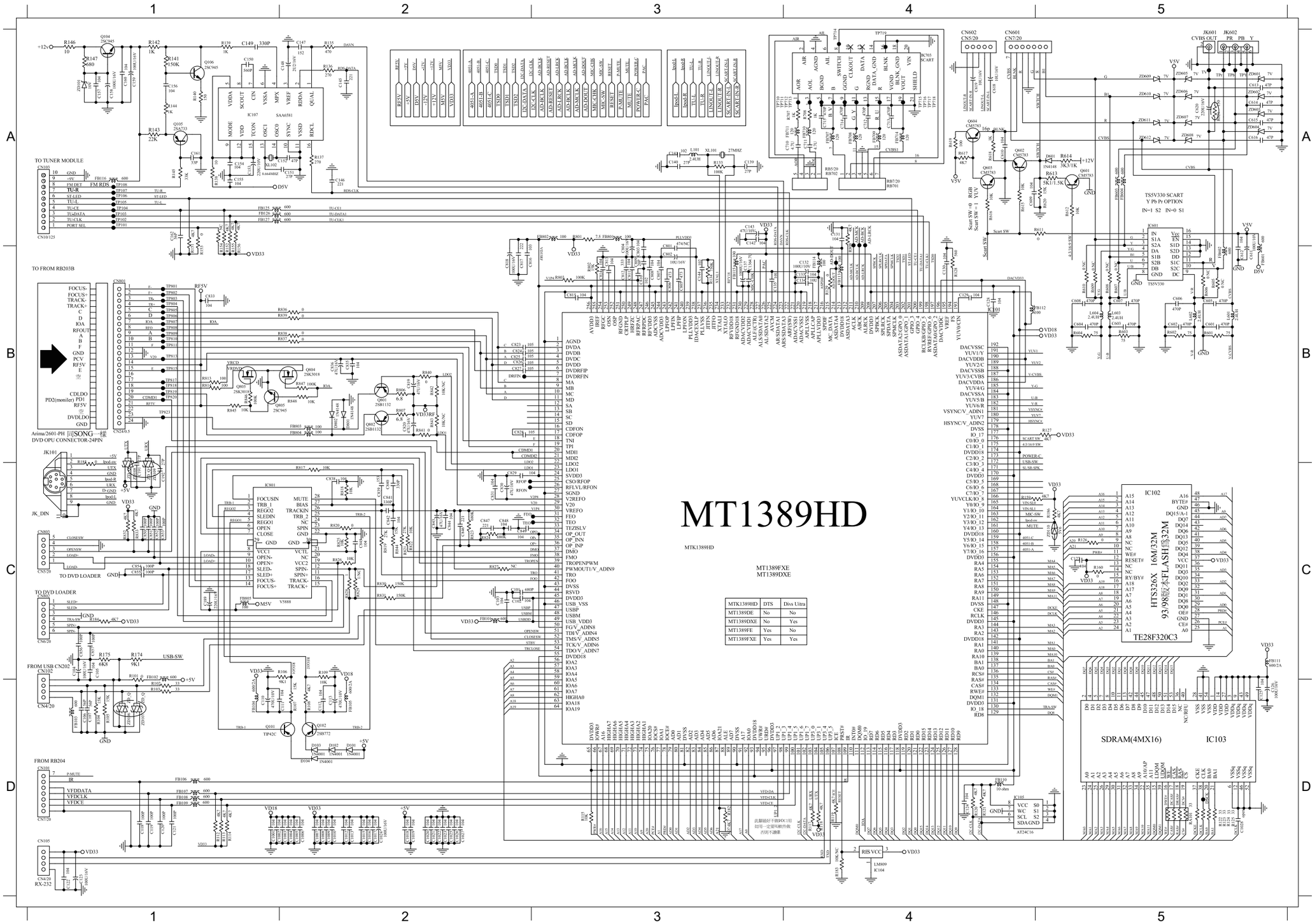

C1001	D1	C608	B5	FB105	D2	R153	A1
C1002	D1	C609	B5	FB106	D1	R155	A1
C1003	D2	C611	B5	FB107	D1	R156	A1
C1004	D2	C612	B5	FB108	D1	R159	C4
C1005	D2	C613	A5	FB109	D1	R160	C5
C1006	D2	C614	A5	FB110	D4	R174	C1
C1007	D2	C615	A5	FB111	C5	R175	C1
C1008	D2	C616	A5	FB112	B4	R182	D3
C1009	D2	C620	A5	FB113	B4	R184	C1
C101	C2	C802	B3	FB114	B4	R185	C1
C1010	D2	C803	B3	FB115	B3	R186	C5
C1012	D2	C804	A3	FB116	A1	R601	B5
C1013	D2	C805	B3	FB125	B1	R602	B5
C1015	D2	C806	B3	FB126	B1	R603	B5
C1016	D2	C807	B3	FB127	B1	R604	B5
C1017	D2	C808	B3	FB601	B5	R605	B5
C1018	D2	C809	B3	FB602	B5	R607	B5
C1019	D2	C810	B3	FB603	A5	R610	B5
C102	C2	C811	B3	FB604	A5	R620	A5
C1020	D2	C812	B3	FB801	A3	R621	A5
C1021	D2	C813	B3	FB802	A3	R801	A3
C1022	D2	C814	B3	FB803	B2	R802	B3
C1023	D2	C815	B3	FB804	B2	R803	B3
C1024	D2	C816	B2	FB805	C1	R806	B2
C1025	D2	C817	B2	IC101	B4	R807	B2
C1026	D2	C818	B2	IC102	C5	R808	A4
C1027	D2	C819	B2	IC103	D5	R813	B1
C1028	D5	C820	B2	IC104	D4	R814	B1
C103	C2	C823	B2	IC105	D4	R817	C2
C104	C1	C824	B2	IC801	C1	R818	C2
C105	C1	C825	B2	JK101	B1	R819	C2
C106	D1	C826	B2	JK601	A5	R820	C2
C107	D1	C827	B2	JK602	A5	R821	C2
C110	D2	C828	B2	L601	B5	R822	C2
C111	D2	C829	C2	L602	B5	R823	C2
C112	D2	C830	C2	L603	B5	R824	C2
C113	D2	C831	C2	L604	B5	R825	C2
C118	D1	C833	B1	Q101	D1	R826	C2
C119	D1	C835	B2	Q102	D2	R828	C2
C120	D1	C836	B2	Q104	A1	R830	C2
C121	D1	C838	C2	Q801	B2	R831	C2
C122	D1	C839	C2	Q802	B2	R832	C1
C123	D1	C840	C2	Q803	B1	R833	C1
C124	D4	C841	C2	Q804	B2	R836	B1
C125	D5	C842	C2	Q805	B1	R837	B1
C126	D5	C843	C2	R101	C1	R838	B1
C127	C5	C844	C2	R102	C1	R839	B1
C128	B4	C845	C2	R103	C1	R840	B2
C129	B4	C846	C2	R104	D1	R841	B2
C130	B4	C847	C2	R105	D1	R844	C2
C131	A4	C848	C2	R106	C1	R845	B1
C132	B4	C849	C2	R107	D2	R846	B1
C133	B4	C850	C1	R108	D2	R847	B2
C134	B4	C851	C1	R109	C2	R848	B2
C135	B3	C852	C1	R112	D1	RA101	D5
C136	B3	C853	C1	R113	D1	XL101	A3
C137	B3	C854	C1	R114	D1	ZD101	A1
C139	A3	C855	C1	R115	D3	ZD106	D1
C140	A3	C856	C1	R117	D4	ZD107	D1
C142	A3	C857	C1	R118	D4	ZD108	C1
C143	A3	CN101	D1	R119	D4	ZD109	C1
C144	B3	CN102	C1	R120	D4	ZD110	B5
C157	A1	CN103	A1	R121	D4	ZD601	A5
C158	A1	CN105	D1	R122	D5	ZD602	A5
C159	A1	CN801	B1	R123	D5	ZD603	A5
C160	A1	CN802	C1	R124	D5	ZD604	A5
C162	A1	CN803	C1	R125	D5	ZD605	A5
C189	C1	D101	D2	R126	C5	ZD606	A5
C191	C1	D102	D2	R127	B5	ZD607	A5
C192	C1	D103	D2	R128	B4	ZD608	A5
C601	B5	D104	D2	R129	B4		
C602	B5	D801	B2	R133	A3		
C603	B5	D802	B2	R134	B3		
C604	B5	FB101	C2	R146	A1		
C605	B5	FB102	C1	R147	A1		
C606	B5	FB103	C1	R151	A1		
C607	B5	FB104	D1	R152	A1		

6 - 3

CIRCUIT DIAGRAM - part two

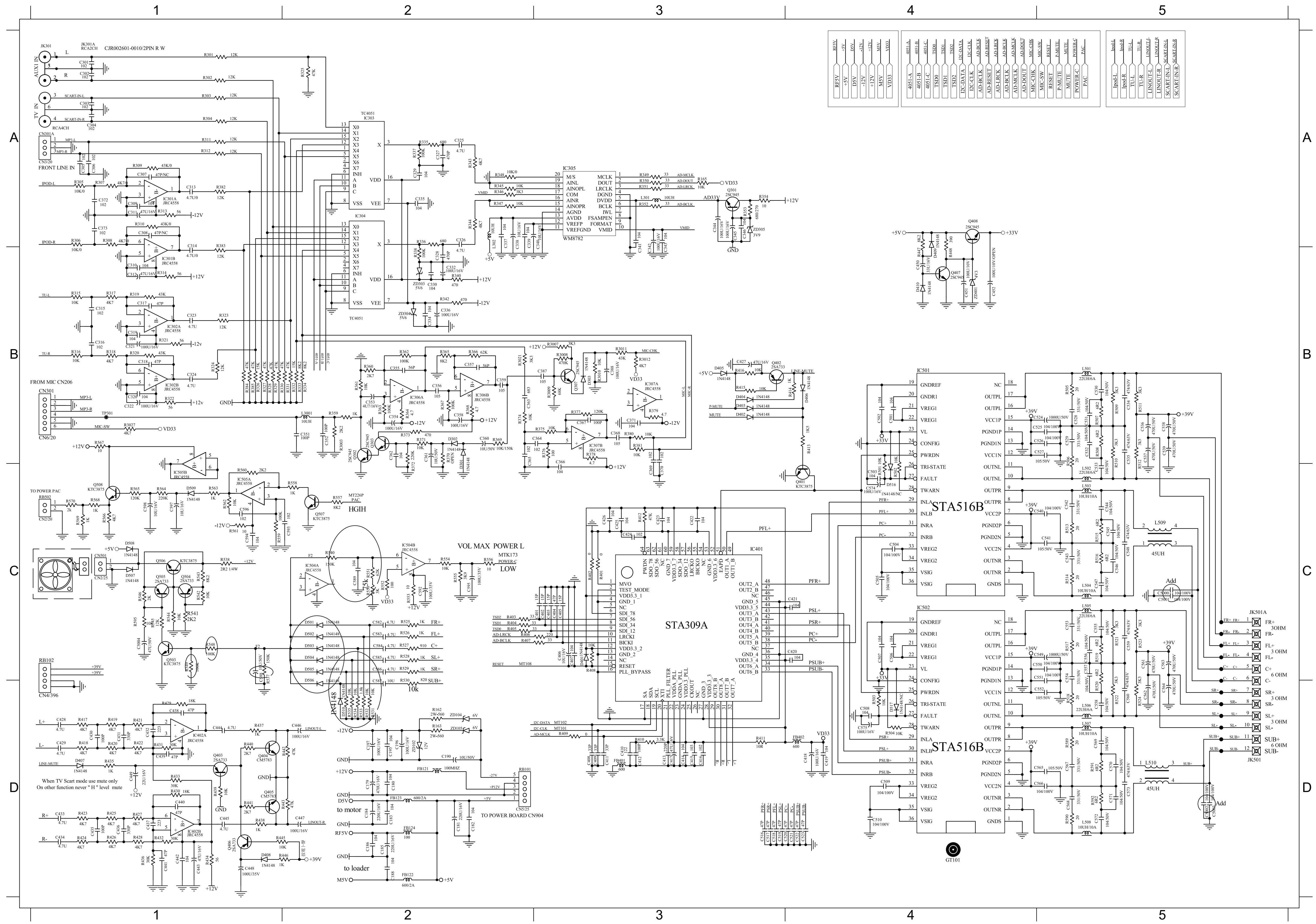

C179	D2	C425	C3	C582	C2	R3012	B3	R505	B5
C180	D2	C426	C3	C583	C2	R302	A1	R506	B5
C181	D2	C427	B3	C584	C2	R3027	B1	R507	B5
C182	D2	C450	B4	C585	C2	R303	A1	R508	B5
C183	D2	C451	B4	C586	C2	R304	A1	R509	B5
C184	D2	C5000	C5	C587	D2	R305	A1	R510	B5
C185	D2	C5001	C5	C588	C1	R306	A1	R511	B5
C186	D2	C5002	D5	C589	C2	R307	A1	R512	B5
C188	D2	C5003	D5	C592	C2	R308	A1	R513	C5
C190	D2	C5004	C1	C593	C2	R309	A1	R514	C5
C195	D2	C501	B4	C594	C1	R310	A1	R515	C5
C196	D2	C502	B4	C595	C2	R311	A1	R516	C5
C197	D2	C503	C4	C596	C1	R312	A1	R517	C5
C301	A1	C504	C4	C597	C1	R313	A1	R518	D5
C302	A1	C505	C4	C598	C1	R314	B1	R519	C5
C303	A1	C506	C4	CN301A	B1	R315	B1	R520	D5
C304	A1	C507	C4	CN501	C1	R316	B1	R521	D5
C305	A1	C508	D4	D401	C3	R317	B1	R522	D5
C306	A1	C509	D4	D402	B3	R318	B1	R523	D5
C311	A1	C510	D4	D403	B3	R319	B1	R524	D5
C312	B1	C516	D3	D404	B3	R320	B1	R525	C2
C313	A1	C517	D3	D405	B3	R321	B1	R526	C2
C314	B1	C518	D3	D406	B4	R322	B1	R527	C2
C315	B1	C519	D3	D409	B4	R323	B1	R528	C2
C316	B1	C520	D4	D410	B4	R324	B1	R529	C2
C317	B1	C521	D4	D501	C2	R325	A2	R530	D2
C318	B1	C522	D4	D502	C2	R326	B1	R531	D2
C319	B1	C523	D4	D503	C2	R327	B1	R532	D2
C320	B1	C524	B3	D504	C2	R328	B1	R533	D2
C321	B1	C525	B3	D505	C2	R329	B1	R534	D2
C322	B1	C526	B3	D506	C2	R330	B1	R535	D2
C323	B1	C527	B3	D507	C1	R331	B2	R537	C1
C324	B1	C528	B5	D508	C1	R332	B2	R538	C1
C325	A2	C529	B5	D509	C1	R333	B2	R540	C2
C326	A2	C530	B5	D510	D2	R334	B2	R541	C1
C327	A2	C531	B5	FB121	D2	R335	A2	R542	C1
C328	B2	C532	B5	FB122	D2	R336	A2	R543	C1
C329	A2	C533	B5	FB123	D2	R337	A2	R544	C1
C330	B2	C534	B5	FB124	D2	R338	B2	R545	C1
C332	B2	C535	B5	FB401	D3	R340	B2	R546	C1
C334	B2	C536	B5	FB402	D4	R342	B2	R548	C1
C335	A2	C537	B5	IC302	B1	R343	A2	R549	C1
C336	B2	C538	B5	IC303	A2	R344	A2	R550	C2
C337	A2	C539	B5	IC304	A2	R345	A2	R551	C2
C338	A2	C540	C3	IC305	A3	R346	A2	R552	C2
C339	A2	C541	C4	IC401	C3	R347	A2	R553	C2
C340	A3	C542	C4	IC501	B4	R348	A2	R554	C2
C341	A3	C543	C4	IC502	C4	R349	A3	R555	C2
C342	A3	C544	C4	IC504	C2	R350	A3	R556	C2
C343	A3	C545	C4	IC505	C1	R351	A3	R557	C2
C344	A3	C546	C4	JK301	A1	R352	A3	R558	C2
C345	A3	C547	C4	JK501	C5	R353	A3	R560	C1
C346	A3	C548	C4	JK501A	C5	R354	A3	R561	C1
C362	B2	C549	C4	L301	A3	R382	A1	R562	C1
C372	A1	C550	C4	L302	A2	R383	A1	R563	C1
C373	A1	C551	C4	L501	B5	R384	B1	R564	C1
C401	C3	C552	D4	L502	C5	R385	B1	R565	C1
C402	C3	C553	C5	L503	C5	R401	C3	R566	C1
C403	C3	C554	C5	L504	C5	R402	C3	R567	B1
C404	C3	C555	C5	L505	C5	R403	C2	R568	C1
C405	C3	C556	C5	L506	D5	R404	C2	R569	C1
C406	C3	C557	C5	L507	D5	R405	C2	R570	C1
C407	C3	C558	D5	L508	D5	R406	C2	R589	D5
C408	D3	C559	C5	L509	C5	R407	C2	R590	D5
C409	D3	C560	C5	L510	D4	R408	C3	R591	D5
C410	D3	C561	C5	Q301	A3	R409	D3	R592	D5
C411	D3	C562	C5	Q401	C4	R410	D3	R595	C1
C412	D3	C563	C5	Q402	B3	R411	D3	RB101	D2
C413	D3	C564	C5	Q407	B4	R412	C3	RB102	C1
C414	D3	C565	D5	Q408	A4	R413	B4	RB502	C1
C415	D3	C566	D5	Q503	C1	R414	B4	ZD102	D2
C416	D3	C567	D5	Q504	C1	R415	B3	ZD104	D2
C417	D3	C568	D5	Q505	C1	R416	B3	ZD105	D2
C418	D4	C569	D5	Q506	C1	R442	D2	ZD303	B2
C419	D4	C570	D5	Q507	C2	R447	B4	ZD304	B2
C420	C4	C571	D5	Q508	C1	R448	B4	ZD305	A3
C421	C4	C572	D5	R162	D2	R501	C4	ZD401	B4
C422	C3	C573	D5	R163	D2	R502	C4		
C423	C3	C574	C5	R165	A3	R503	D4		
C424	C3	C575	D5	R301	A1	R504	D4		

6 - 4

PCB LAYOUT - TOP VIEW

C1024 D2	C158 B1	C317 A1	C344 B2	C501 D4	C529 C4	C560 B3	C596 C2	C816 D1	C843 D1	D405 C2	FB112 C1	FB803 D1	JK101 A2	L601 B1	Q801 D1	R126 C1	R303 B1	R322 A1	R342 A1	R402 C2	R501 D4	R542 A3	R562 C2	R610 A1	R836 D1	ZD110 B2
C1028 B1	C159 B1	C318 B1	C345 C2	C502 D4	C534 B3	C561 B3	C597 C2	C818 D1	C846 D1	D406 C2	FB114 C1	FB804 D1	JK301 A2	L602 B1	Q802 D1	R128 B1	R304 A2	R323 B1	R343 B2	R403 C2	R502 D4	R543 A3	R563 C2	R621 A1	R837 D1	ZD303 B1
C104 D2	C179 D2	C321 A1	C362 B2	C503 D4	C535 B3	C562 A3	C598 C2	C819 D1	CN101 D2	D409 D3	FB115 C1	FB805 D2	JK501 A3	L603 B1	Q803 D1	R129 C1	R305 A1	R324 A2	R344 B2	R404 C2	R503 D3	R544 A3	R564 C2	R801 D1	R838 D1	ZD304 A1
C106 D2	C181 D2	C322 A1	C372 A1	C504 D4	C536 B4	C563 B3	C601 B1	C820 D1	CN102 D2	D410 D3	FB121 D2	IC101 C1	JK501A A4	L604 B1	Q804 D1	R133 C1	R306 A2	R325 B1	R345 B2	R405 C2	R504 D3	R545 B3	R565 C2	R802 D1	R839 D1	ZD305 A2
C107 D2	C184 D2	C323 A1	C373 A2	C505 D4	C537 B3	C564 B3	C602 B1	C823 D1	CN103 B1	D507 B3	FB122 D2	IC102 D1	JK601 A1	Q101 D2	Q805 D1	R134 C1	R307 A1	R326 A2	R346 B2	R406 C2	R505 C4	R546 A3	R566 C2	R806 D1	R840 D1	ZD401 D3
C110 D2	C188 D2	C324 A1	C406 D2	C506 D4	C538 B4	C565 C3	C603 B1	C824 D1	CN105 C2	D508 A2	FB123 D2	IC103 B1	JK602 A1	Q102 D2	R101 D2	R152 B1	R308 A2	R327 B2	R347 B2	R407 C2	R506 C4	R548 B3	R567 C2	R807 D1	R841 D1	ZD605 A1
C113 C2	C189 D2	C325 B2	C408 C2	C507 D4	C539 B4	C566 C3	C604 B1	C825 D1	CN301A B2	D509 C2	FB124 D1	IC104 C2	L301 B2	Q104 B1	R102 D1	R155 B1	R309 A1	R328 A2	R348 B2	R408 C2	R509 B3	R549 B3	R568 D2	R813 D1	R845 D1	ZD606 A1
C123 C2	C190 D3	C326 B2	C409 C2	C508 D3	C540 C4	C567 C3	C606 B1	C826 D1	CN501 B3	D801 D1	FB125 B1	IC105 C2	L302 B2	Q301 A2	R103 D1	R156 B1	R310 A2	R329 A2	R349 B2	R409 C2	R510 B3	R550 C2	R569 D2	R814 D1	R846 D1	ZD607 A1
C124 C2	C191 C2	C327 B1	C410 D2	C509 D3	C541 C4	C568 C3	C608 A1	C827 D1	CN801 D1	D802 D1	FB126 B1	IC302 B1	L501 B3	Q401 C2	R104 D2	R162 D2	R311 B2	R330 B1	R350 B2	R410 D3	R511 B3	R551 C2	R570 D2	R817 D1	R847 D1	ZD608 A1
C126 B2	C192 C2	C328 B2	C411 D2	C510 D3	C542 C4	C573 B3	C611 B1	C828 D1	CN802 D2	FB102 D2	FB127 B1	IC303 B1	L502 C4	Q402 C2	R105 D2	R163 D3	R312 B2	R331 B1	R351 B2	R411 D3	R512 B3	R552 C2	R589 C3	R818 D1	R848 D1	
C129 B1	C196 D3	C332 B1	C412 D2	C517 D3	C543 C4	C574 D4	C620 A1	C830 D1	CN803 D2	FB104 C2	FB401 D2	IC304 B2	L503 B5	Q407 D3	R107 D2	R165 C2	R313 A1	R332 B1	R352 B2	R412 D2	R513 C4	R553 C2	R590 C3	R819 D1	RA101 C1	
C130 B1	C197 B1	C335 A2	C413 D2	C519 D3	C548 B3	C575 D4	C802 C1	C833 D1	D101 D2	FB105 C2	FB402 C2	IC305 B2	L504 C4	Q408 D3	R108 D2	R174 C2	R314 A1	R333 B1	R353 A2	R413 C2	R514 C4	R554 C2	R595 B3	R820 D1	RB101 D2	
C132 C1	C311 A1	C336 B1	C417 D2	C520 D3	C549 C4	C588 A3	C804 C1	C836 D1	D102 D2	FB106 D2	FB601 B1	IC401 C3	L505 B5	Q503 B3	R109 D2	R175 C2	R315 A1	R334 B2	R354 A2	R414 C2	R517 C4	R555 C2	R601 B1	R821 D1	RB102 C3	
C137 C1	C312 A1	C338 B2	C418 D2	C521 D3	C551 C3	C589 C2	C805 C1	C838 D1	D103 D2	FB107 D2	FB602 A1	IC501 D4	L506 C4	Q504 A3	R115 D1	R185 B2	R316 B1	R335 B1	R382 B1	R415 C2	R518 C3	R556 B2	R602 B1	R823 D1	RB502 C2	
C139 C1	C313 A1	C340 B2	C427 C2	C524 C3	C552 C4	C592 B2	C806 C1	C839 D1	D104 D2	FB108 D2	FB603 A1	IC502 D3	L507 B3	Q505 A3	R120 C2	R186 B2	R317 A1	R336 B2	R383 A2	R416 C2	R537 A3	R557 C2	R603 B1	R826 D1	XL101 D1	
C140 C1	C314 A2	C341 B2	C450 D3	C526 C4	C553 C4	C593 C2	C812 D1	C840 D1	D402 D2	FB109 D2	FB604 A1	IC504 C2	L508 C3	Q506 A3	R121 C2	R301 B1	R318 B1	R337 B1	R384 A2	R442 B2	R538 A3	R558 C2	R604 B1	R828 D2	ZD102 D3	
C143 D1	C315 A1	C342 B2	C451 D3	C527 C4	C554 C4	C594 C2	C813 C1	C841 D1	D403 D2	FB110 C2	FB801 D1	IC505 C2	L509 A3	Q507 C2	R122 B1	R302 A2	R319 A1	R338 B2	R385 B1	R447 D3	R540 C2	R560 C2	R605 B1	R830 D2	ZD104 D2	
C144 C1	C316 B1	C343 C2	C5004 B3	C528 C4	C559 B3	C595 C2	C814 D1	C842 D1	D404 C2	FB111 C2	FB802 D1	IC801 D1	L510 B3	Q508 C2	R123 B1	R3027 B2	R320 B1	R340 A1	R401 C2	R448 D3	R541 A3	R561 C2	R607 B1	R831 D2	ZD105 D2	

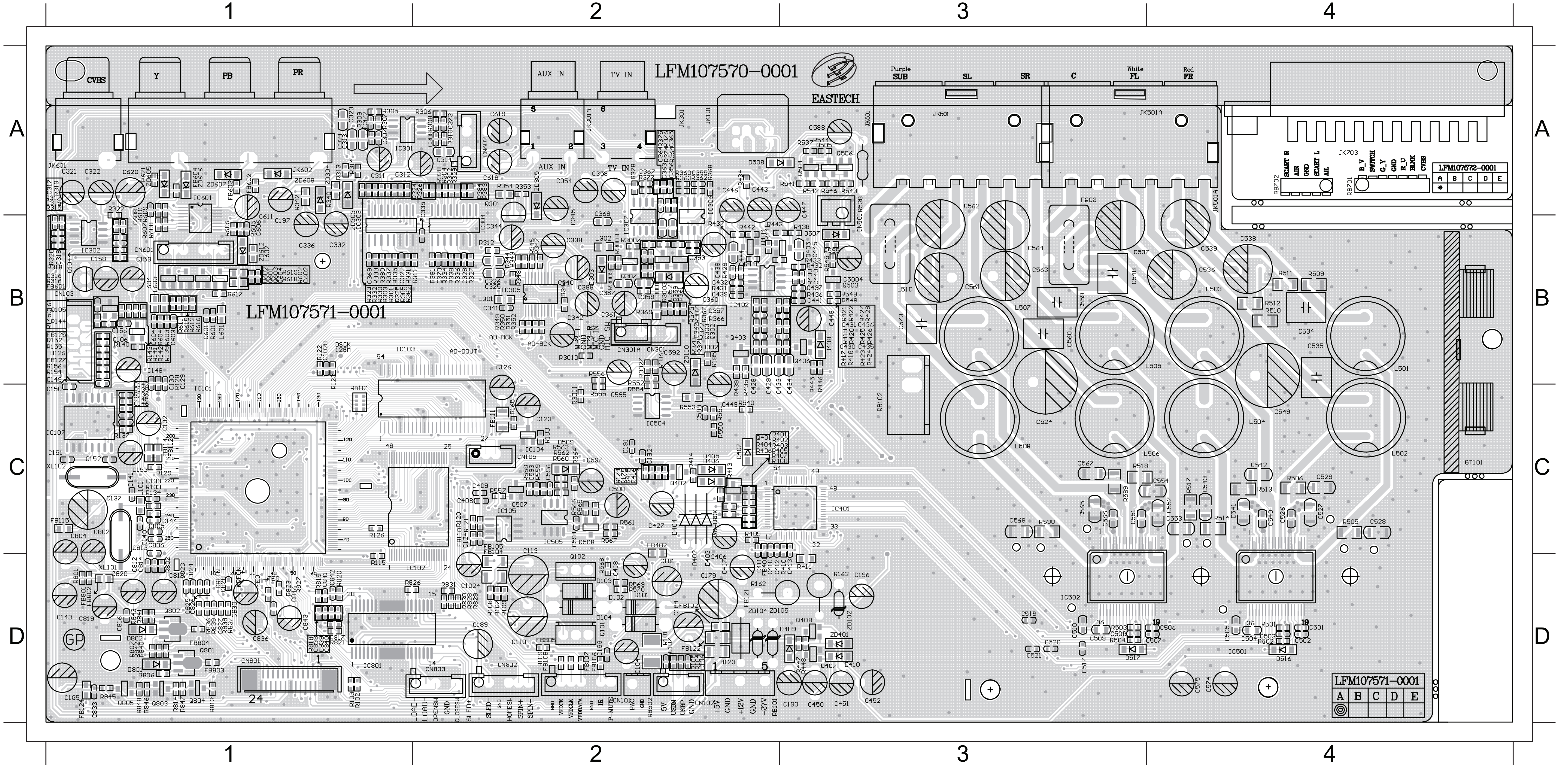

6 - 5

PCB LAYOUT - BOTTOM VIEW

C1001	C4	C1012	B4	C1023	B3	C121	D3	C157	B4	C303	A3	C346	A3	C420	C2	C516	D2	C546	C1	C582	A1	C614	A4	C829	D4	C853	D3	D506	A2	R118	C4	R182	C3	R522	B2	R533	A2	R832	D4	ZD604	A4
C1002	D4	C1013	B4	C1025	C2	C122	C3	C160	B4	C304	A3	C401	C3	C421	C2	C518	D2	C547	C1	C583	A2	C615	A4	C831	D4	C854	D3	D510	A1	R119	C4	R184	D3	R523	B2	R534	A2	R833	D4		
C1003	D4	C1015	C4	C1026	B4	C125	C3	C162	B4	C305	B3	C402	C3	C422	C2	C522	D2	C550	C2	C584	A2	C616	A4	C835	D4	C855	D3	FB101	C4	R124	C3	R3012	C3	R524	B2	R535	A2	R844	D4		
C1004	C4	C1016	C4	C1027	D2	C127	C4	C180	D3	C306	B3	C403	C3	C423	C2	C523	D2	C555	B2	C585	A2	C803	C4	C844	D4	C856	D3	FB103	D3	R125	C3	R321	A4	R525	A1	R591	B2	ZD101	B4		
C1005	B4	C1017	C4	C103	C4	C128	C4	C182	D3	C319	B4	C404	C3	C424	C3	C525	C1	C556	B2	C586	A2	C807	C4	C845	D3	C857	D3	FB113	A4	R127	C4	R507	B1	R526	A2	R592	C2	ZD106	D3		
C1006	C4	C1018	D3	C105	D3	C131	C4	C183	D3	C320	B4	C405	C3	C425	C3	C530	B1	C557	C2	C587	A2	C808	C4	C847	C4	D401	C3	FB116	B4	R146	A4	R508	C1	R527	A2	R620	B4	ZD107	D3		
C1007	C3	C1019	D4	C111	D3	C133	C4	C185	C4	C329	A4	C407	C3	C426	C2	C531	B1	C558	C2	C605	B4	C809	C4	C848	C4	D501	A1	R106	D3	R147	A4	R515	B1	R528	A2	R803	C4	ZD108	A3		
C1008	C4	C102	C4	C112	D3	C134	C4	C186	D4	C330	A4	C414	C2	C5000	A2	C532	C1	C569	B2	C607	B4	C810	C4	C849	C4	D502	A2	R112	D3	R151	B4	R516	C1	R529	A2	R808	C4	ZD109	A3		
C1009	C4	C1020	D2	C118	D3	C135	C4	C195	D2	C334	A4	C415	C2	C5001	A2	C533	C1	C570	B2	C609	B4	C811	C4	C850	D3	D503	A2	R113	D3	R153	B4	R519	B2	R530	A2	R822	D4	ZD601	A4		
C101	C4	C1021	C2	C119	D3	C136	C4	C301	A3	C337	B3	C416	C2	C5002	A2	C544	B1	C571	C2	C612	B4	C815	C4	C851	D3	D504	A2	R114	D3	R159	C4	R520	C2	R531	A1	R824	C4	ZD602	A4		
C1010	C3	C1022	B4	C120	D3	C142	D4	C302	A3	C339	B3	C419	C3	C5003	A2	C545	B1	C572	C2	C613	A4	C817	D4	C852	D3	D505	A2	R117	C4	R160	D3	R521	B2	R532	A1	R825	C3	ZD603	A4		

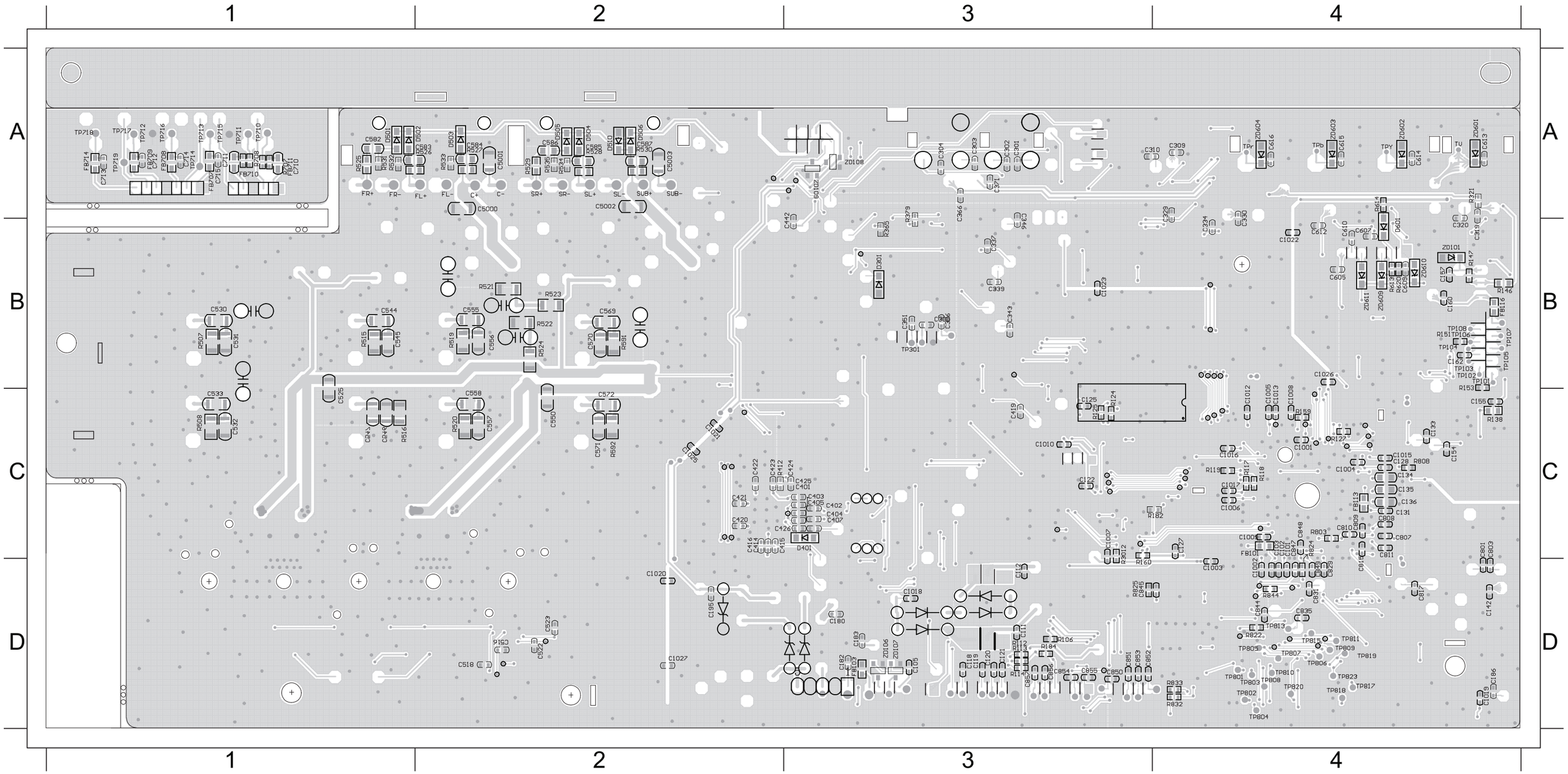

POWER BOARD

TABLE OF CONTENTS

Internal IC Diagram 7-1
Circuit Diagram 7-2
PCB Layout - Top View 7-3
PCB Layout - Bottom View 7-4

INTERNAL IC DIAGRAM - AP3843GMTR

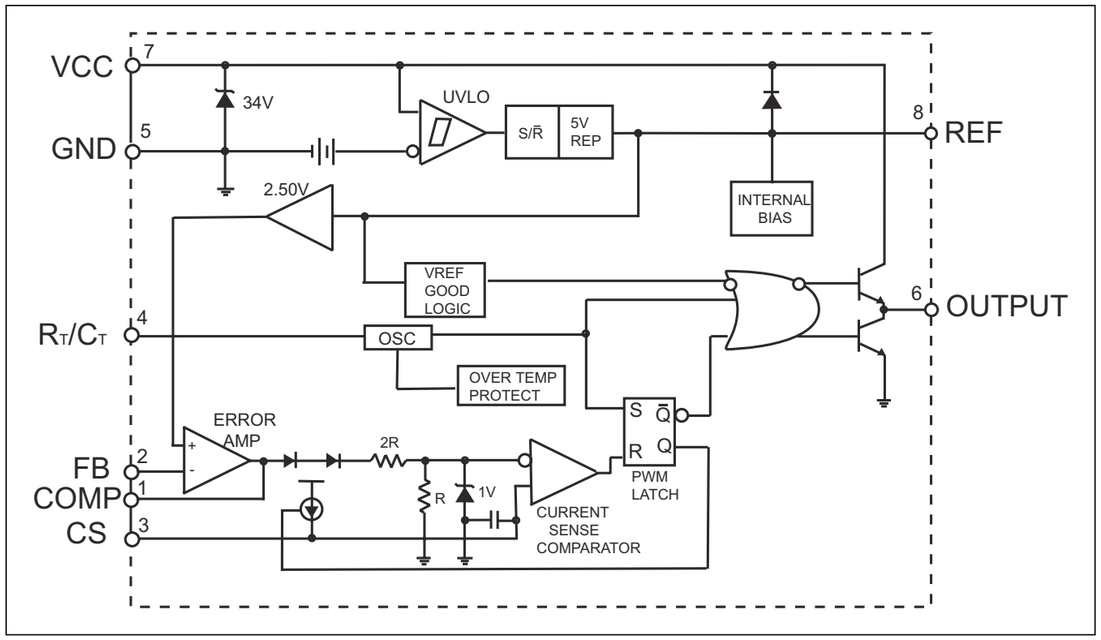

INTERNAL IC DIAGRAM - KA7500C

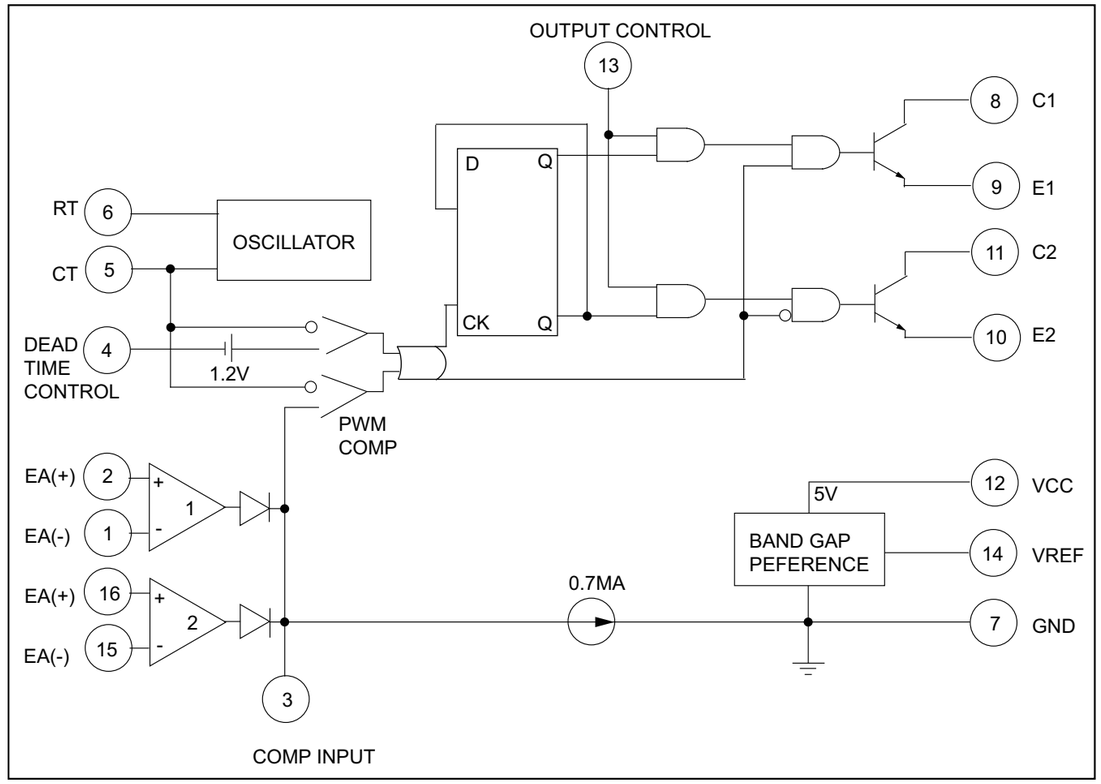

7 - 2

CIRCUIT DIAGRAM

BD901	A1	C915	C1	C926	D3	C937	C3	C948	C3	C960	C3	C972	A3	C985	D1	D904	B2	D916	B2	GT902	B2	L907	A3	Q912	B2	R907	C2	R922	D3	R935	C2	R946	C2	R959	C3	R970	A4	R982	A4	ZD902	C2
C901	D1	C916	C1	C927	C3	C938	B3	C949	A3	C961	C3	C973	D4	C992	B3	D905	B2	D917	C3	IC901	C1	L908	A3	Q913	A2	R908	C1	R925	D3	R936	C2	R947	D4	R960	A4	R971	A3	R983	D1	ZD903	B2
C902	D1	C917	B1	C928	C3	C939	C2	C950	A2	C962	C3	C974	B4	C993	B3	D906	A2	D918	C2	IC903	D2	NTC901	C1	Q914	C3	R909	A3	R926	B3	R937	C2	R948	C4	R961	C4	R972	A3	R984	D2	ZD904	A2
C903	D1	C918	B1	C929	C3	C940	D3	C951	A3	C963	C3	C975	C4	C994	D1	D907	B3	D919	C3	IC904	D3	Q902	C1	Q915	D4	R911	C4	R927	D2	R938	C3	R949	A2	R962	C3	R973	A3	R985	C3	ZD905	A3
C904	A1	C919	B1	C930	B4	C941	C2	C952	A2	C964	C4	C977	D1	CN901	D1	D908	B3	D922	C3	IC905	C4	Q903	D1	Q916	D2	R912	B1	R928	D2	R939	C3	R950	A2	R963	B3	R974	A3	R986	B4	ZD906	C4
C905	A1	C920	A1	C931	C3	C942	C2	C954	D3	C965	C3	C978	B1	CN903	D4	D909	B3	D923	C3	L901	C1	Q905	D3	R901	C1	R914	B1	R929	D2	R940	C2	R951	A2	R964	B3	R975	A3	R987	D1	ZD907	B4
C906	D1	C921	A1	C932	C3	C943	B2	C955	C3	C966	B3	C980	C4	CN904	C4	D910	A3	D924	A3	L902	B1	Q907	D2	R902	C1	R915	A1	R930	C2	R941	B2	R954	D3	R965	B3	R976	A3	T901	C2	ZD908	A4
C909	D1	C922	D2	C933	C2	C944	A2	C956	C3	C967	B3	C981	C4	CN905	A4	D911	A3	D927	C4	L903	D4	Q908	D2	R903	C1	R916	A1	R931	C2	R942	B2	R955	D3	R966	B3	R977	D4	T902	B2	ZD909	A4
C910	C1	C923	D2	C934	C2	C945	C1	C957	A3	C968	A3	C982	D1	CN907	B4	D912	A4	D928	B4	L904	C3	Q909	D2	R904	C1	R917	A1	R932	C2	R943	B2	R956	C3	R967	B3	R978	D4	T903	A2	ZD910	A4
C913	C1	C924	D3	C935	C3	C946	A2	C958	A4	C969	A3	C983	D1	D902	D2	D914	A4	D929	D1	L905	C3	Q910	B3	R905	C1	R918	A1	R933	C2	R944	A2	R957	C3	R968	B3	R979	C4	TVR901	C1	ZD911	D2
C914	C2	C925	D3	C936	B2	C947	C3	C959	C3	C971	A3	C984	D1	D903	B2	D915	C3	F901	C1	L906	B3	Q911	B3	R906	C2	R920	C2	R934	C2	R945	A3	R958	C3	R969	B4	R980	C4	ZD901	D2	ZD913	A3

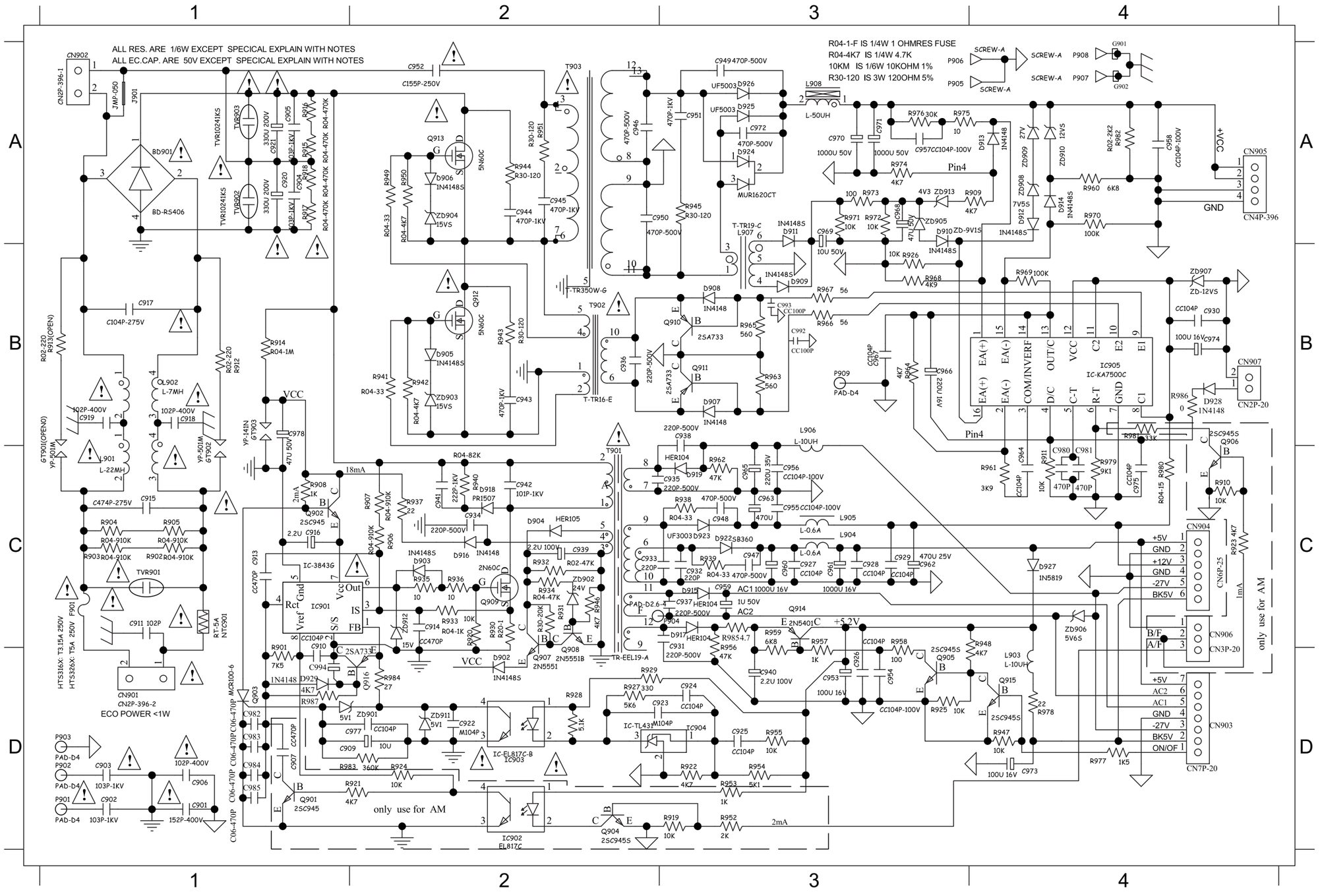

7 - 3

PCB LAYOUT - TOP VIEW

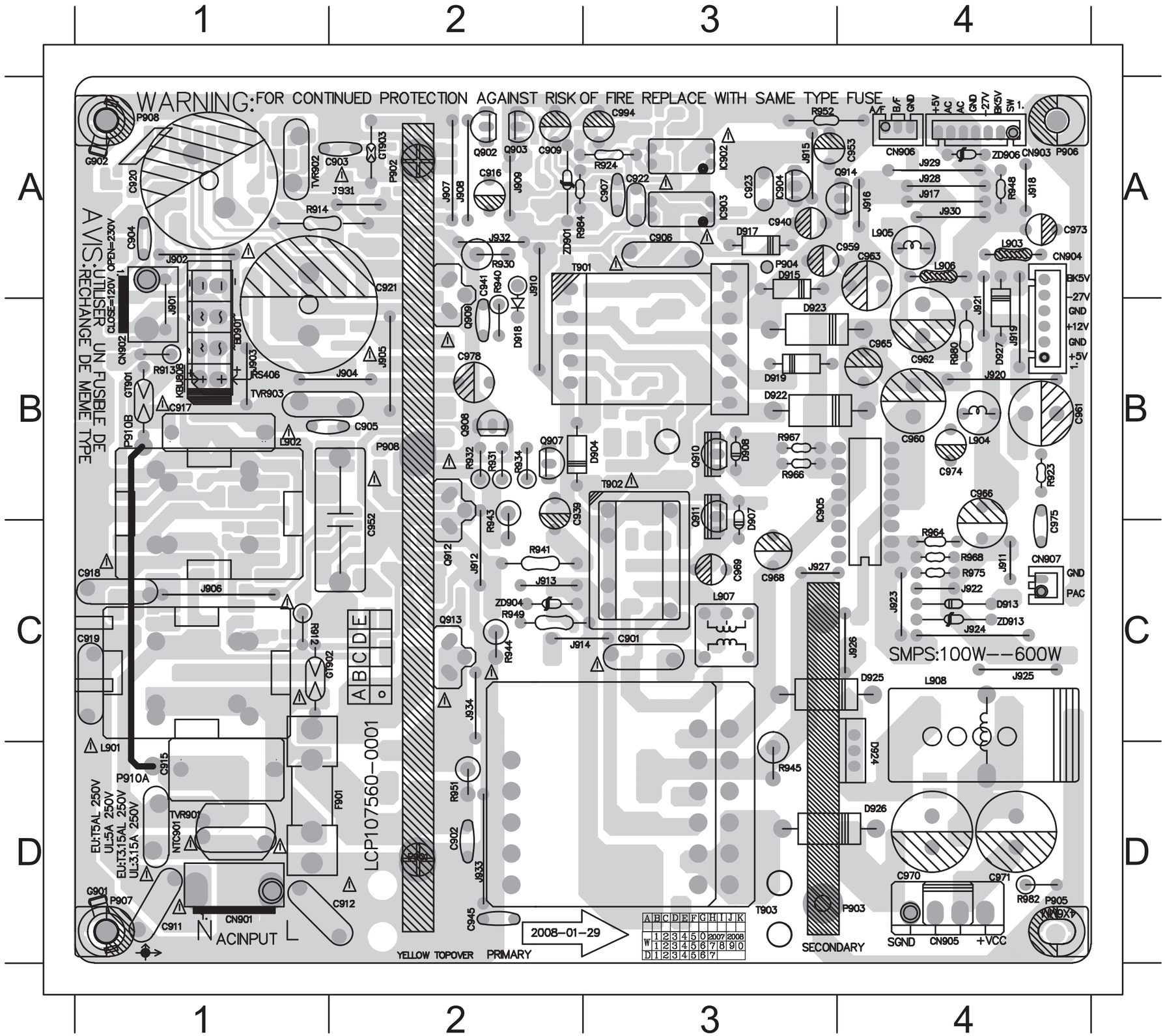

BD901	B1	IC903	A3	R914	A1
C901	C3	IC904	A3	R930	A2
C902	D2	IC905	B3	R931	B2
C903	A2	J901	A1	R932	B2
C904	A1	J902	A1	R934	B2
C905	B2	J903	B1	R940	A2
C906	A3	J904	B2	R941	C2
C909	A2	J905	B2	R943	C2
C915	D1	J906	C2	R944	C2
C916	A2	J907	A2	R945	D3
C917	B1	J908	A2	R948	A4
C918	C1	J909	A2	R949	C2
C919	C1	J910	A2	R951	D2
C920	A1	J911	C4	R964	C4
C921	A2	J912	C2	R966	B3
C922	A3	J913	C2	R967	B3
C923	A3	J914	C2	R968	C4
C939	B2	J915	A3	R975	C4
C940	A3	J916	A4	R980	B4
C941	A2	J917	A4	R982	D4
C945	D2	J918	A4	R984	A2
C952	C2	J920	B4	T901	A2
C959	A4	J921	B4	T902	B3
C960	B4	J922	C4	T903	D3
C961	B4	J923	C4	TVR901	D1
C962	B4	J924	C4	ZD901	A2
C963	B4	J925	C4	ZD904	C2
C965	B4	J926	C4	ZD906	A4
C966	B4	J927	C3	ZD911	A2
C968	C3	J929	A4	ZD913	C4
C969	C3	J930	A4		
C971	D4	J931	A2		
C973	A4	J932	A2		
C974	B4	J933	D2		
C975	B2	J934	D2		
C978	B2	L901	D1		
C994	A3	L902	B1		
CN901	D1	L903	A4		
CN903	A4	L904	B4		
CN904	A4	L905	A4		
CN905	D4	L906	A4		
CN907	C4	L907	C3		
D904	B3	L908	C4		
D907	B3	NTC901	D1		
D908	B3	Q902	A2		
D915	A3	Q903	A2		
D917	A3	Q907	B2		
D918	B2	Q908	B2		
D919	B3	Q909	B2		
D922	B3	Q910	B3		
D923	B3	Q911	B3		
D924	D4	Q912	C2		
D927	B4	Q913	C2		
F901	D2	Q914	A4		
GT902	C2	R912	C1		

7 - 4

PCB LAYOUT - BOTTOM VIEW

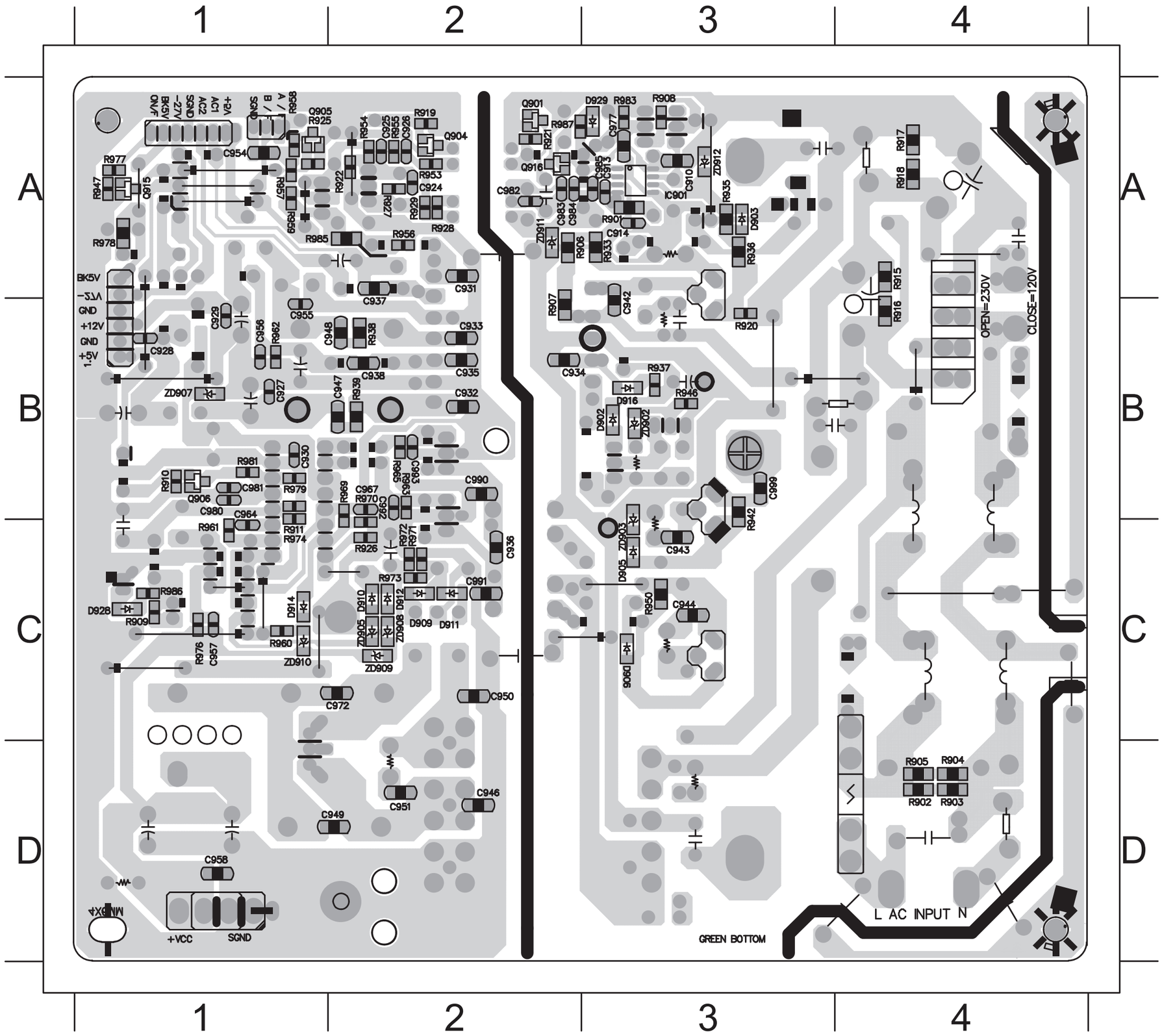

C910	A3	R903	D4
C913	A3	R904	D4
C914	A3	R905	D4
C924	A2	R906	A2
C925	A2	R907	A2
C926	A2	R908	A3
C927	B1	R909	C1
C928	B1	R911	C1
C929	B1	R915	A4
C930	B1	R916	B4
C931	A2	R917	A4
C932	B2	R918	A4
C933	B2	R920	B3
C934	B2	R922	A2
C935	B2	R925	A1
C936	C2	R926	C2
C937	A2	R927	A2
C938	B2	R928	A2
C942	A3	R929	A2
C943	C3	R933	A3
C944	C3	R935	A3
C946	D2	R936	A3
C947	B2	R937	B3
C948	B1	R938	B2
C949	D1	R939	B2
C950	C2	R942	B3
C951	D3	R946	B3
C954	A1	R947	A1
C955	B1	R950	C3
C956	B1	R954	A2
C957	C1	R955	A2
C958	D1	R956	A2
C964	B1	R957	A1
C967	B2	R958	A1
C972	C1	R959	A1
C977	A3	R960	C1
C980	B1	R961	C1
C981	B1	R962	B1
C982	A2	R963	B2
C983	A2	R965	B2
C984	A2	R969	B2
C985	A3	R970	B2
C992	B2	R971	C2
C993	B2	R972	C2
D902	B3	R973	C2
D903	A3	R974	C1
D905	C3	R976	C1
D906	C3	R977	A1
D909	C2	R978	A1
D910	C2	R979	B1
D911	C2	R983	A3
D912	C2	R985	A1
D914	C1	R986	C1
D916	B3	R987	A2
D928	C1	ZD902	B3
D929	A3	ZD903	C3
IC901	A3	ZD905	C2
Q905	A1	ZD907	B1
Q915	A1	ZD908	C2
Q916	A2	ZD909	C2
R901	A3	ZD910	C1
R902	D4		

8 - 1

MECHANICAL EXPLODED VIEW

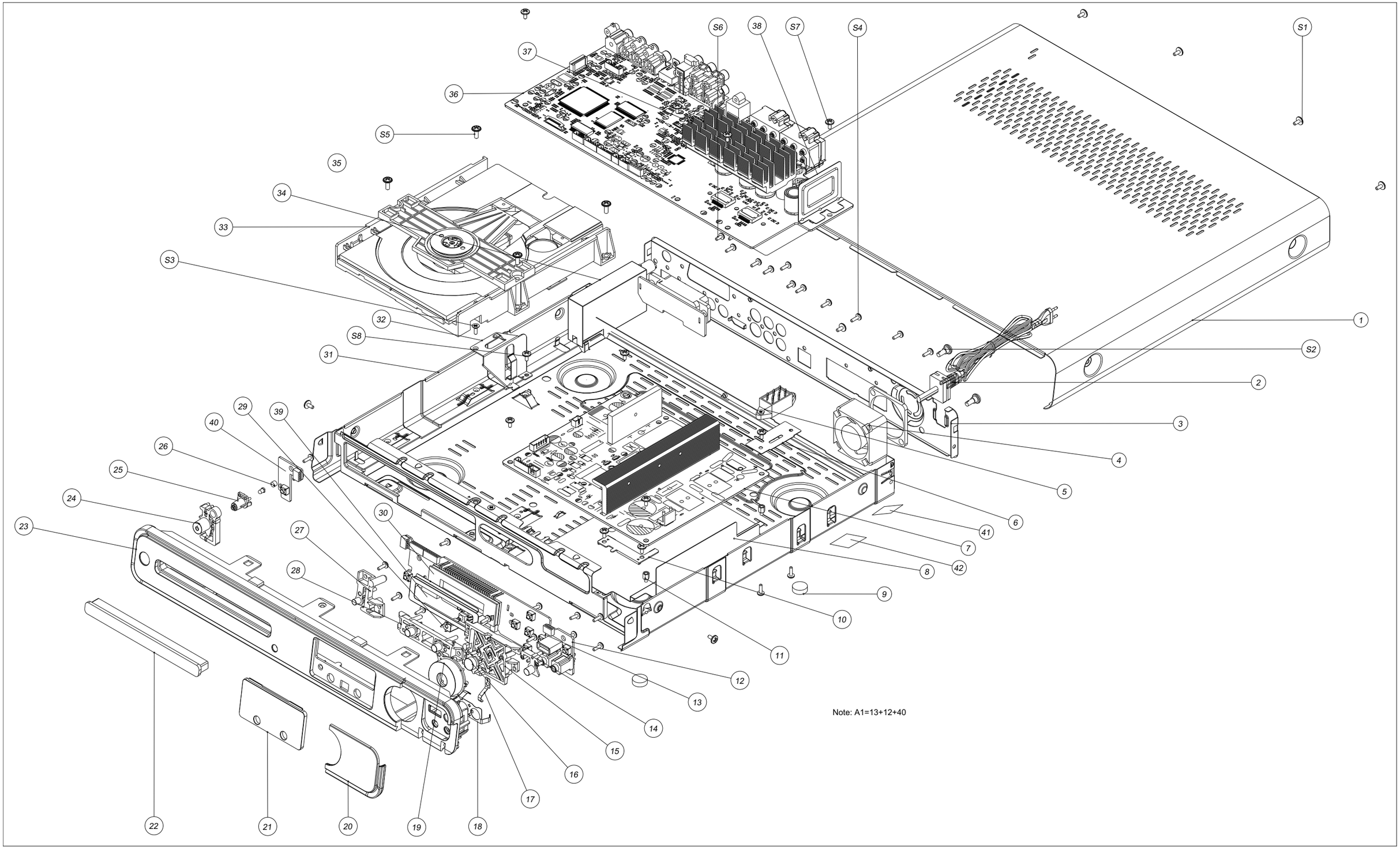

Note: A1=13+12+40

8 - 2

MECHANICAL PART LIST

Loc.	Part No.	Description
MAIN		
1	996510013764	TOP COVER SECC
2	996510001252	PWR CORD
3	996510013765	REAR COVER SECC
4	996510012461	FAN DC
7	996510015624	POWER PCB ASSY
8	996510011276	POWER PCB PLATE PVC
9	996510011288	RUBBER FOOT
15	996510011285	FUCTION BUTTON BASE ABS
16	996510011284	SOURCE BUTTON ABS
19	996510011282	FUNCTION BUTTON ABS
20	996510011287	CONNECTORS COVER
21	996510011286	VFD LENS PMMA
22	996510013762	DVD DOOR ABS
23	996510013763	FRONT PANEL
24	996510011280	POWER BUTTON ABS
25	996510010840	STANDBY LENS
27	996510011281	EJECT BUTTON ABS
28	996510011283	VOLUME BUTTON ABS
31	996510013766	BOTTOM COVER SECC
33	996510010819	DVD LOADER
34	996510010825	TUNER
36	996510015625	MAIN+SCART PCB ASSY
42	996510011277	PVC SHEET-SMALL
A1	996510015626	VFD+JACK+STANDBY ASSY
DOCK	996510010855	SIMPLE IPOD DOCK
FM	994000002731	FM ANTENNA 1500MM
RC	996510010856	REMOTE CONTROL
V1	996510000673	FFC CABLE 10P 100MM P1.25MM
V1	996510007429	FFCCBLE 10P100mm
V3	996510007319	FFC CABLE 24P 200MM
V3	996510013767	FFC CABLE 24P
VIDEO	996500013058	RCA CABLE 2P 1.2M
SPEAKER		
RFC	996510001599	RUBBER FOOT -CENTER SPK
RFFR	996510001601	RUBBER FOOT - FRONT SPK
RFS	996510010854	RUBBER FOOT -CENTER
SPKC	996510013768	SPEAKER BOX -CENTER
SPKFL	996510013769	SPEAKER BOX - FRONT LEFT
SPKFR	996510013770	SPEAKER BOX - FRONT RIGHT
SPKRL	996510013771	SPEAKER BOX - REAR LEFT
SPKRR	996510013772	SPEAKER BOX - REAR RIGHT
SUBW	996510013773	SUBWOOFER

REVISION LIST

Version 1.0
*Initial release

Version 1.1
*Mechanical Part List updated

9 - 1